(March 2024)

GUNDJEIHMI ABORIGINAL

CORPORATION JABIRU TOWN

Standard Outdoor Living Area Designs

1. Purpose

The Jabiru Masterplan Development Management Framework (JMDMF) includes Housing Design Requirements (2021) at Appendix H. The Housing Design Requirements stipulate that 'dwellings must include cool outdoor living areas for entertaining that also act as an extension of the living space' in accordance with this Standard Outdoor Living Area Designs.

Several standard designs have been drafted and certified as 'Structurally Adequate'. These designs have been approved by GACJT and are available for proponents to utilise and included in this document.

Proponents can also develop their own designs for approval by GACJT in accordance with the General Design Principals below.

2. General Design Principles

The JMDMF encourages the use of Bioclimatic design (a way of designing buildings to suit the local climate, with the aim of ensuring thermal comfort using passive design principals and environmentally sustainable resources). As part of this approach proponents are encouraged to consider the following principals when designing and positioning outdoor living areas:

- Consider the site layout and position the outdoor living area to optimize prevailing breezes and maximize shade to the outdoor living area and the home.
- Position living areas away from sleeping areas.
- Position to protect existing trees and allow space for additional planting.
- Have sufficient height to incorporate ceiling fans, 2500mm minimum 2700mm or greater optimal.
- Incorporate roof insulation, Minimum Kingspan Air-cell 65 or equal.
- Size to suit up to 8 people eating, approximately 5mx4m minimum with 1100mm eave overhang from columns.

2.1. Pre-approved Designs

Several Designs have been pre-approved by the GACJT Board. These designs are specific to 9 of the 14 standard housing types built at Jabiru and satisfy outdoor living areas requirement of the JMDMF. These designs are stamped 'Certified as Structurally Adequate'. Proponents may use these designs.

These housing types are:

- Ranger House type R3A
- Ranger House type R3B
- Ranger House type R3C
- Ranger House type R3D
- Ranger House type R4A
- Ranger House type R4B
- Parks House type L-shape
- Parks House type H-shape
- Miscellaneous House type – 3-bed

2.2. GACJT Approval Process

An Approved Managing Entity (or tenant with the landlord's written consent) may apply to install one of the Pre-Approved Designs or an alternate design by requesting consent from the GACJT CEO in writing. All requests are to:

1. be consistent with the Jabiru Masterplan Development Managing Framework.
2. include a site plan, floor plan and elevations, drawn at scale and with sufficient dimensions to assess the proposal (pre-approved design drawings or site specific drawings to a 'town planning' level of documentation).
3. include assurance that work will comply with all other requirements including the Jabiru Town Plan, the NT building act and National Construction Code;
4. include written consent from the sub-lessee, if the request is from a tenant and not the landlord; and

Alternative designs can be approved on a case-by-case basis. These requests must be approved by the GACJT Board.

2.3. Other Approvals

Proponents are advised that other approvals will be required under the NT Building Act and Building Regulations apply to Jabiru. Proponents are required to obtain Building certification, Building permits etc in accord with the NT Building Act and Building Regulations.

https://nt.gov.au/property/building/build-or-renovate-your-home/building-and-renovating-a-home/residential-building-work-that-requires-permits

Town planning approval may also be required through the NT Development Consent Authority where proposals do not align with the Jabiru Town Plan.

3. Attachments

1. Ranger House type R3A Pre-Approve Design
2. Ranger House type R3B Pre-Approve Design
3. Ranger House type R3C Pre-Approve Design
4. Ranger House type R3D Pre-Approve Design
5. Ranger House type R4A Pre-Approve Design
6. Ranger House type R4B Pre-Approve Design
7. Parks House type L-shape Pre-Approve Design
8. Parks House type H-shape Pre-Approve Design
9. Miscellaneous House type – 3-bed Pre-Approve Design.

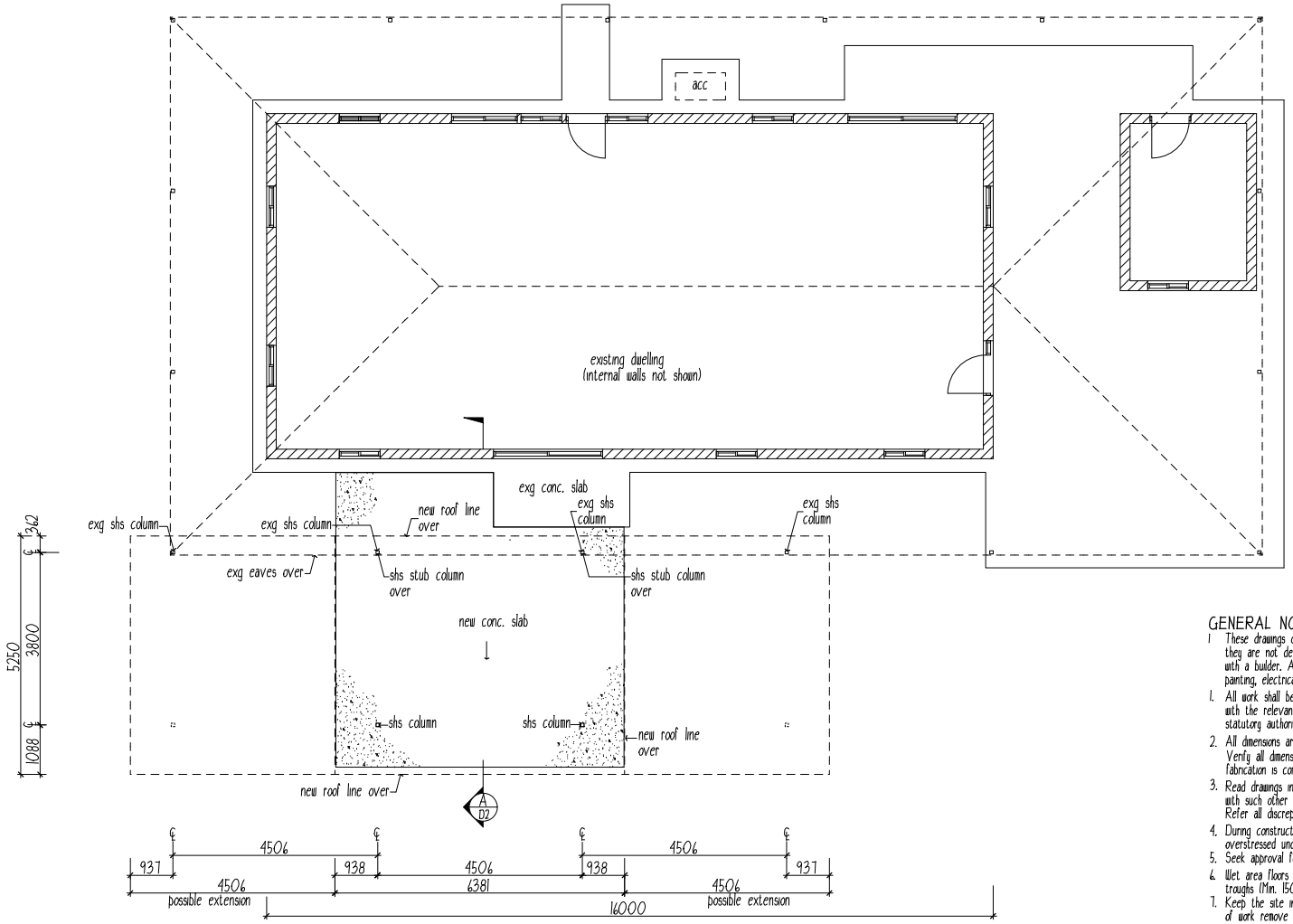

ELEVATION
refer Dwg. No. D2

LAYOUT PLAN
1 : 100

CERTIFIED AS STRUCTURALLY ADEQUATE

KFB Engineers — Civil & Structural
1/38-42 Pease St, Cairns | PO Box 927, Cairns Q 4870
P: 07 40320492 | F: 07 40320092 | E: email@kfbeng.com.au

Date: 2/12/21 Signed:
Job No: K-9712 NT Reg. 33968ES

GENERAL NOTES

1 These drawings contain information required for obtaining abuilding permit, they are not detailed sufficiently for a specification for a building contract with a builder. An additional specification should be written to include painting, electrical & plumbing fittings & secondary fixings.

1. All work shall be in accordance with the Building Code of Australia & comply with the relevant current Standards Association of Australia codes and the local statutory authorities' regulations, except where varied by the contract documents.
2. All dimensions are in millimetres unless stated otherwise. All levels are expressed in metres. Verify all dimensions relevant to setting out and off-site work before construction and fabrication is commenced. Do not scale the drawings unless noted otherwise.
3. Read drawings in conjunction with all other consultants' drawings and specifications and with such other written instructions as may be issued during the course of the contract. Refer all discrepancies to the Superintendent for decision before proceeding with the work.
4. During construction maintain the structure in a stable condition and ensure no part is overstressed under construction activities.
5. Seek approval for all substitutions from the Superintendent before the work commences.
6. Wet area floors to be mosaic tiles or equal. Provide splashbacks to basins, sinks & troughs (Min. 150 high)
7. Keep the site in a clean & tidy condition thoughout construction & at the completion of work remove all litter & debris to the satisfaction of the superintendent.

Wilkins Drafting Service Ph.0457889990	Project Title: PROPOSED UNDERCOVER AREA RANGER HOUSE R3-A JABIRU HOUSING JABIRU, N.T.	Drawing Title: LAYOUT PLAN GENERAL NOTES	Client: Gundjeihmi Aboriginal Corporation.
			Scale: as shown on A3 — Date: 02/12/2021
			Job No.: J21403-R3A — Dwg. No.: D1 of 5

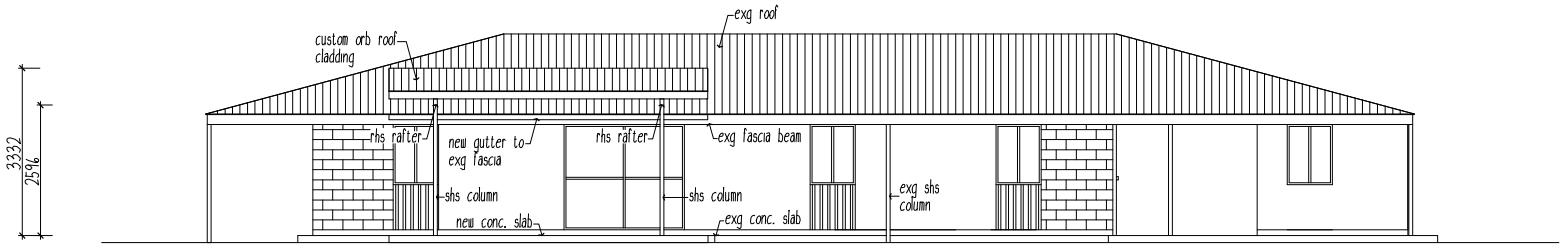

ELEVATION 1
1 : 100

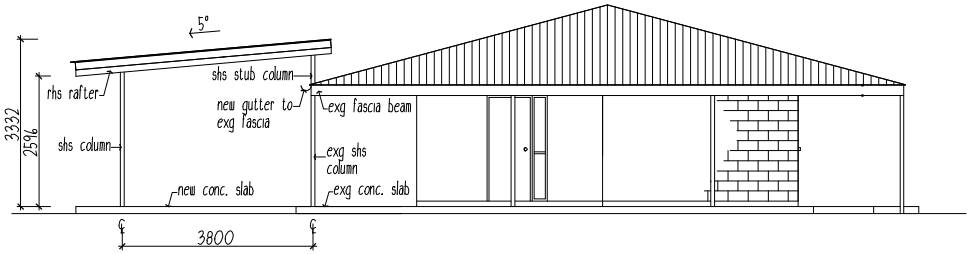

ELEVATION 2
1 : 100

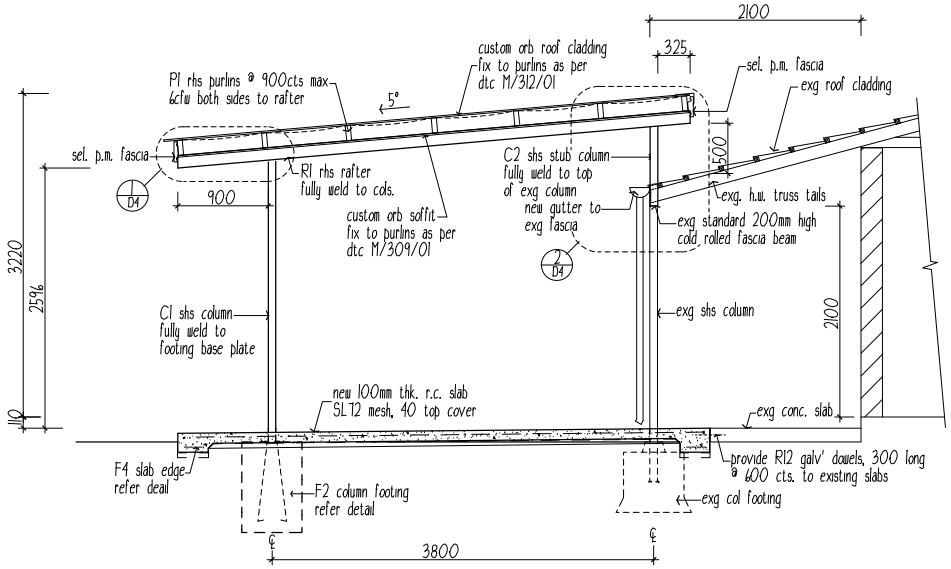

SECTION A
1 : 50

LEGEND :

F2 600dia. x 900deep conc. footing refer typical detail
F4 300wide x 200deep slab edge thickening refer typical detail
C1 75 x 4 SHS column
C2 75 x 4 SHS stub column
R1 125 x 75 x 4 RHS rafter
P1 150 x 50 x 2 RHS purlin

CERTIFIED AS STRUCTURALLY ADEQUATE

KFB Engineers — Civil & Structural
1/38-42 Pease St, Cairns | PO Box 927, Cairns Q 4870
P: 07 40320492 | F: 07 40320092 | E: email@kfbeng.com.au

Date: 2/12/21 Signed:
Job No: K-9712
NT Reg. 33968ES

Wilkins Drafting Service Ph.0457889990	Project Title: PROPOSED UNDERCOVER AREA RANGER HOUSE R3-A JABIRU HOUSING JABIRU, N.T.	Drawing Title: ELEVATIONS SECTION A	Client: Gundjeihmi Aboriginal Corporation.
			Scale: as shown on A3 — Date: 02/12/2021
			Job No.: J21403-R3A — Dwg. No.: D2 of 5

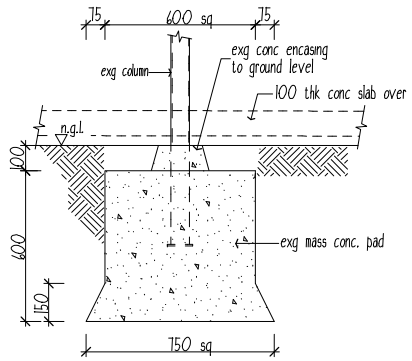

DETAIL WW - TYPICAL EXISTING FOOTING
1 : 20

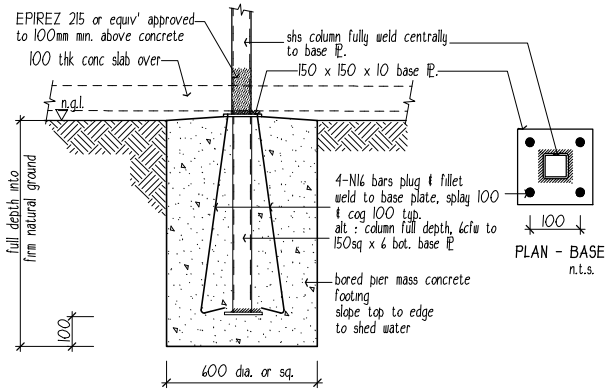

PLAN - BASE PLATE
n.t.s.

DETAIL YY - F2 - TYPICAL DETAIL
1 : 20

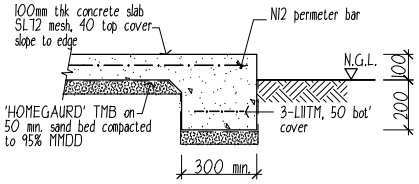

F4 - TYPICAL DETAIL
1 : 20

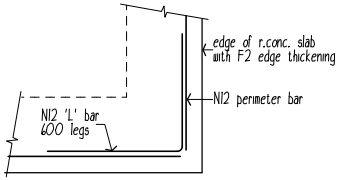

TYPICAL CORNER REINF' PLAN DETAIL
N.T.S.

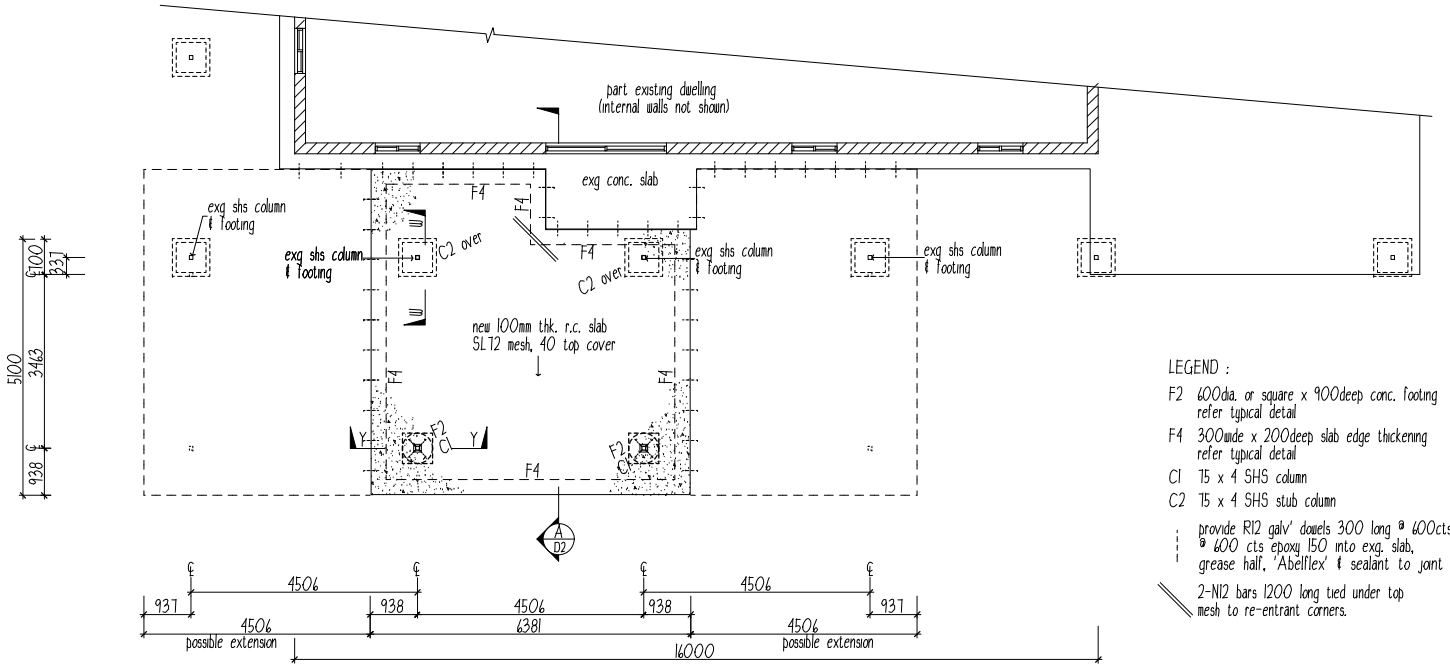

LEGEND :

F2 600dia. or square x 900deep conc. footing refer typical detail

F4 300wide x 200deep slab edge thickening refer typical detail

C1 75 x 4 SHS column

C2 75 x 4 SHS stub column

provide R12 galv' dowels 300 long @ 600cts @ 600 cts epoxy 150 into exg. slab, grease half, 'Abelflex' & sealant to joint

2-N12 bars 1200 long tied under top mesh to re-entrant corners.

CERTIFIED AS STRUCTURALLY ADEQUATE

KFB Engineers Civil & Structural
1/38-42 Pease St, Cairns | PO Box 927, Cairns Q 4870
P: 07 40320492 | F: 07 40320092 | E: email@kfbeng.com.au

Date: 2/12/21 Signed:
Job No: K-9712
NT Reg. 33968ES

SLAB/FOOTING PLAN
1 : 100

Wilkins Drafting Service Ph.0457889990	Project Title: PROPOSED UNDERCOVER AREA RANGER HOUSE R3-A JABIRU HOUSING JABIRU, N.T.	Drawing Title: SLAB/FOOTING PLAN TYPICAL FOOTING DETAILS	Client: Gundjeihmi Aboriginal Corporation.
			Scale: as shown on A3 / Date: 02/12/2021
			Job No.: J21403-R3A / Dwg. No.: D3 of 5

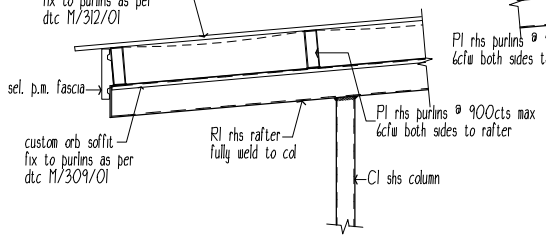

DETAIL 1 / D2
1 : 20

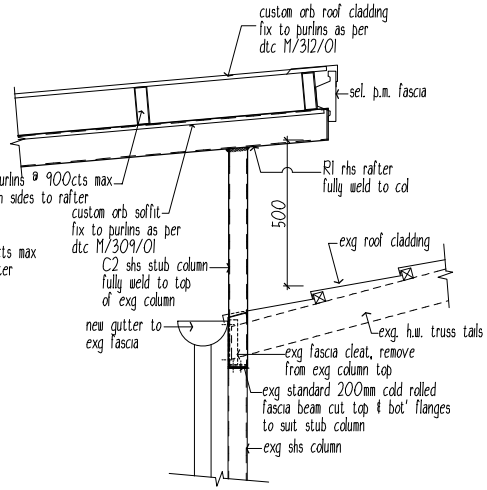

DETAIL 2 / D2
1 : 20

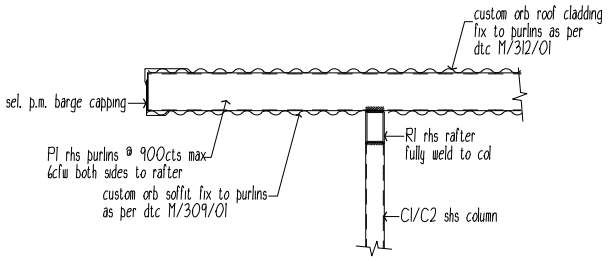

DETAIL 3 / --
1 : 20

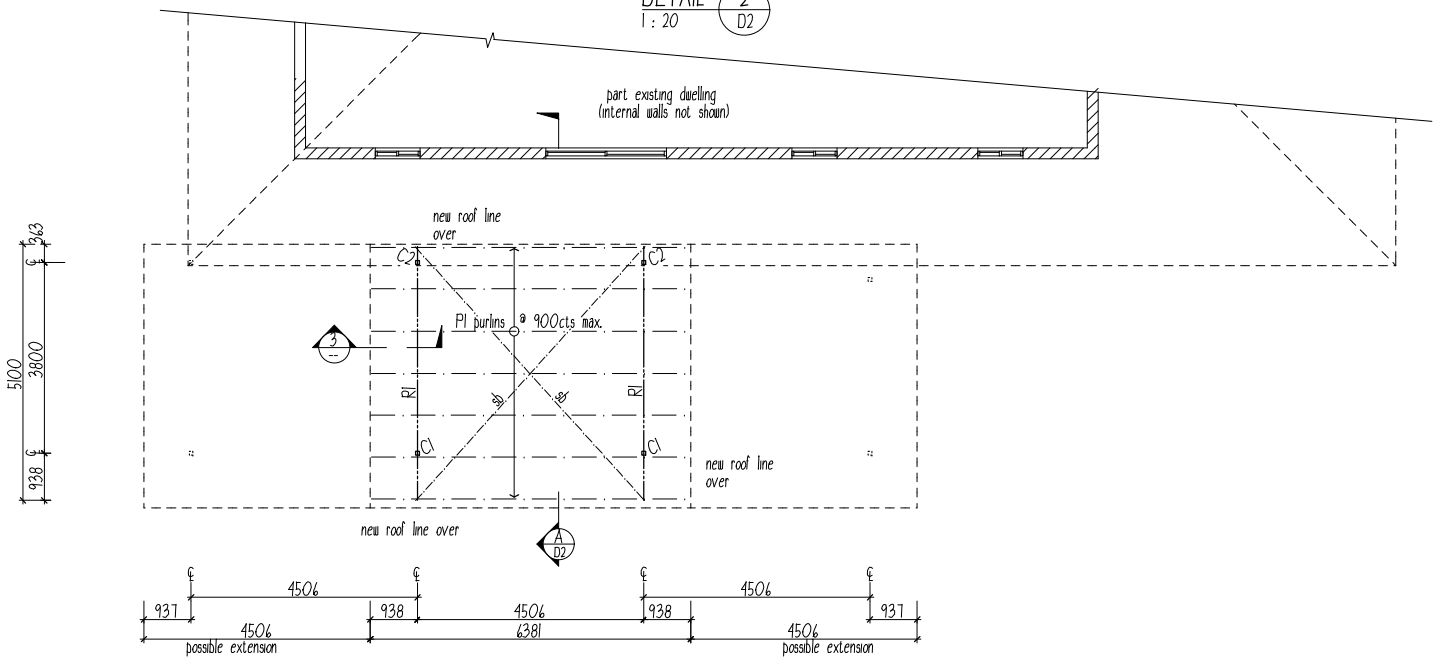

ROOF FRAMING PLAN
1 : 100

LEGEND :

C1 75 x 4 SHS column
C2 75 x 4 SHS stub column
R1 125 x 75 x 4 RHS rafter
P1 150 x 50 x 2 RHS purlin

CERTIFIED AS STRUCTURALLY ADEQUATE

KFB Engineers — Civil & Structural
1/38-42 Pease St, Cairns | PO Box 927, Cairns Q 4870
P: 07 40320492 | F: 07 40320092 | E: email@kfbeng.com.au

Date: 2/12/21 Signed:
Job No: K-9712
NT Reg. 33968ES

Wilkins Drafting Service
Ph.0457889990

Project Title
PROPOSED UNDERCOVER AREA
RANGER HOUSE R3-A
JABIRU HOUSING
JABIRU, N.T.

Drawing Title
ROOF FRAMING PLAN
DETAILS 1 - 3

Client: Gundjeihmi Aboriginal Corporation.
Scale: as shown on A3
Date: 02/12/2021
Job No.: J21403-R3A
Dwg. No.: D4 of 5

NOTES

GENERAL

1. All work shall be in accordance with the Building Code of Australia & comply with the relevant current Standards Association of Australia codes and the local statutory authorities' regulations, except where varied by the contract documents.
2. Verify all dimensions relevant to setting out and off-site work before construction and fabrication is commenced. Do not scale the drawings unless noted otherwise.
3. All dimensions are in millimetres unless stated otherwise. All levels are expressed in metres.
4. Read drawings in conjunction with all other consultants' drawings and specifications and with such other written instructions as may be issued during the course of the contract Refer all discrepancies to the Superintendent for decision before proceeding with the work.
5. During construction maintain the structure in a stable condition and ensure no part is overstressed under construction activities.
6. Seek approval for all substitutions from the Superintendent before the work commences.
7. Keep the site in a clean & tidy condition thoughout construction & at the completion of work remove all litter & debris to the satisfaction of the superintendent.

DESIGN CRITERIA

1. Dead & live loads - in accordance with AS1170.1 - 2011
2. The Design Wind Criteria is as follows :

Region	C
Design Wind Speed	V500 Vr = 69m/s
Terrain Category	2.5
Internal Pressure Coefficient	+0.7 / -0.65

External Pressure Coefficient in accordance with AS1170 - 2011

3. Foundation design bearing capacity = 100kPa (allowable).

Wind Classification C2 (AS4055)

Ultimate and Serviceability Limit State Design
Wind Pressures

Wind Classification	Design gust wind speed (m/s)		Design pressures for windows (kPa)			
	Vh,u	Vh,s	Greater than 1.2m from corners		Up to 1.2m from corners	
	ULS	SLS	ULS	SLS	ULS	SLS
C1	50	32	±1.80	±0.55	-2.70	-0.83
C2	61	39	±2.68	±0.88	-4.02	-1.23
C3	74	47	±3.94	±1.19	-5.91	-1.79

EARTHWORKS

1. Earthworks construction shall comply with AS3798 & AS2870.
2. Excavation & service trenches shall comply with the following guidelines unless otherwise approved by the engineer

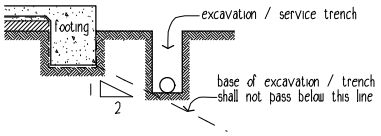

TERMITE MANAGEMENT SYSTEM

1. Termite Management System to be installed & certified by an approved applicator in accordance with AS 3660.1.
2. Provide Min. 300 wide x 50mm concrete mowing strip over perimeter reticulation system as to AS3660.1
3. A durable certificate is to be fixed in the meter box on completion.

FOOTINGS

1. Found all footings in original undisturbed ground having a safe bearing capacity of 150 kPa as noted on drawings. Before any concrete is placed, ensure the safe bearing capacity is verified.
2. Backfill sewers, stormwater drains and other in-ground services adjacent to buildings, if laid before footings are constructed, with approved fill placed in 200mm Max. layers and compacted to 95% MMDD.
   If laid after footings are constructed, avoid undermining of footings by either fully shoring trenches, or keeping excavation outside an influence line extended downwards at a slope of 1 in 2 from the the bottom corner of all footings. Backfill trenches as noted above.
3. Use selected fill (gravel, decomposed or broken rock) free from clay clumps and organic matter, conforming with the following grading requirements :

AS METRIC SIEVE	% PASSING BY WEIGHT	AS METRIC SIEVE	% PASSING BY WEIGHT
75.0 mm	100	2.36 mm	20 - 50
9.5 mm	30 - 100	0.075 mm	5 - 25

   Strip the area of the works of all top soil and deleterious material prior to placement of fill or compaction. Compact fill up to 150 mm below slab level in 150 mm layers to 95% MMDD.
4. Compact fill in the 150 mm layer immediately below slab level to 95% MMDD. Compact sand blinding layer below concrete slab by vibration plate or flooding to 95% MMDD.
5. Backfill over excavation with lean mix concrete.
6. Builder to confirm site classification "S" to AS2870

DRAINAGE

1. The contractor shall determine the exact location of existing services prior to any installation or commencement of work.

CONCRETE

1. All slabs & footings shall be constructed to comply with the requirements of AS2870 - 2011
2. Concrete slump shall be 80 ± 15mm. No admixtures to be used without approval from the engineer.
3. Concrete cover to be maintained by the use of approved chairs at nominal 800cts. Conduits & pipes shall not be placed within concrete cover.
4. Mesh reinforcement laps shall be at least one full wire spacing plus 25mm. Reinforcement shall be in accordance with AS4671.
5. Continuously cure slabs for a minimum of 7 days after casting by ponding, covering with a waterproof membrane or other approved means.

STEEL

1. All structural steelwork shall comply with AS 4100 - SAA Steel Struct. Code & associated Australian Standards.
2. Ensure welding is performed by an experienced operator in accordance with AS 1554.
3. Use hot dipped galvanised commerial bolts (Grade 4.6/S) to AS1111 and AS 1112, tightened to a snug tight fit unless otherwise shown. Where bolts are designated grade 8.8/S, use high strength bolts to AS 1252, tightened to a snug tigh fit.
   Where bolts are designated 8.8/TF or grade 8.8/TB use high strength steel bolts (grade 8.8/S) to AS 1252, fully tensioned in accordance with AS 1511.
4. During construction provide and leave in place, untill permanent bracing elements are constructed, such temporary bracing as is necessary to stabilise the structure during erection.
5. Seal the ends of all tubular members with nominal thickness plates and continuous fillet welds unless otherwise shown.
6. Except where otherwise shown fully weld connections with 6mm continuous fillet general purpose (G.P.) welds for the full contact area. Special purpoes welds are designated (S.P.)
7. Unless otherwise specified, paint all external steelwork with one shop coat of Inorganic Zinc Silicate primer after blast cleaning to a class 2.5 finish. Touch up damaged areas with cold galv after power cleaning. members encased in concrete, fire sprayed or HSTF bolted connections must not be painted
8. Unless otherwise specified paint all internal steelwork with one shop coat of Red Oxide Zinc Phoshate primer after blast cleaning to a class 2 finish. Touch up damaged areas as required after power cleaning. Alternatively for RHS, use 'Duragal' and touch up with Dimet Zeden or equal and paint for long term protection to manufacturers recommendations.
9. Unless otherwise specified paint steelwork below finished surface level and not concrete encased with high build epoxy.
10. Unless otherwise specified paint all steelwork one shop coat of Red Oxide Zinc Phosphate primer. Do not paint members encased in concrete, fire sprayed or friction grip bolted connections.
11. Protective coatings to all external steelwork to comply with BCA-96 Table 3.4.4.2.

TIMBER

1. Structural timber shall be minimum stress grade F17 (U.N.O.) to comply with AS1720

SITE DRAINAGE

1. Ground adjacent to building shall be graded away to fall at least 50mm over 1 metre width to satisfy BCA clause 3.1.2.3 surface water drainage.

CERTIFIED AS STRUCTURALLY ADEQUATE

KFB Engineers Civil & Structural
1/38-42 Pease St, Cairns | PO Box 927, Cairns Q 4870
P: 07 40320492 | F: 07 40320092 | E: email@kfbeng.com.au

Date: 2/12/21 Signed:
Job No: K-9712 NT Reg. 33968ES

Wilkins Drafting Service Ph.0457889990	Project Title: PROPOSED UNDERCOVER AREA RANGER HOUSE R3-A JABIRU HOUSING JABIRU, N.T.	Drawing Title: STRUCTURAL NOTES	Client: Gundjeihmi Aboriginal Corporation.
			Scale: as shown on A3 / Date: 02/12/2021
			Job No.: J21403-R3A / Dwg. No.: D5 of 5

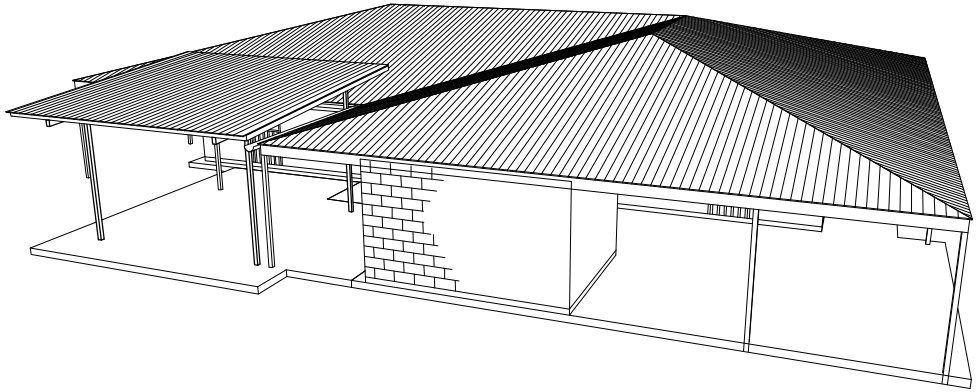

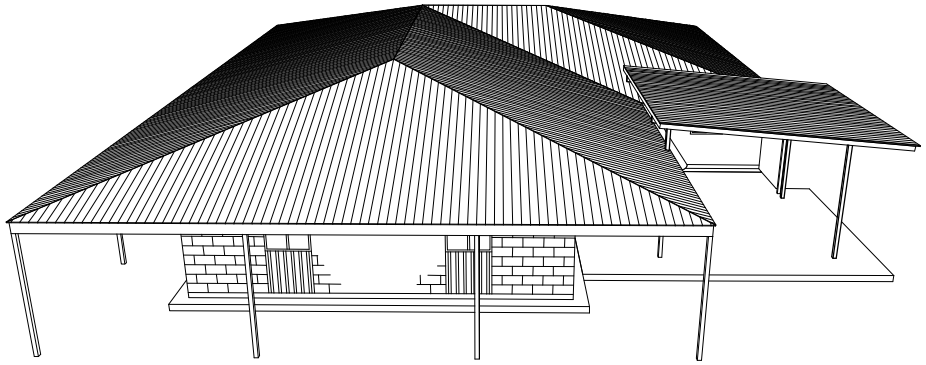

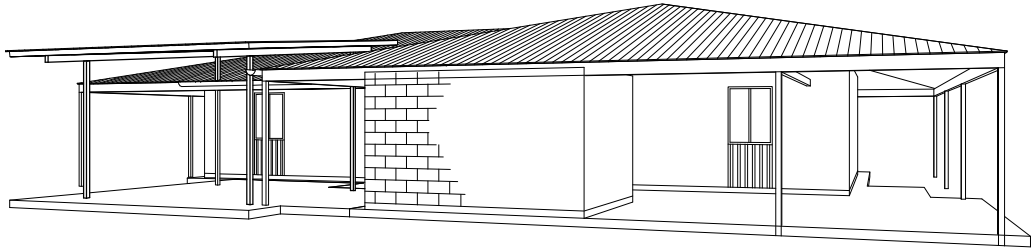

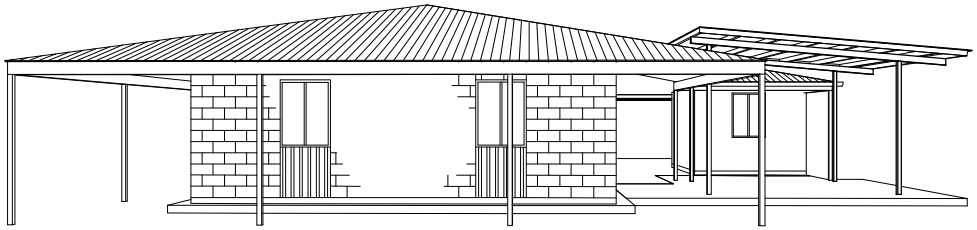

Wilkins Drafting Service Ph.0457889990	Project Title PROPOSED UNDERCOVER AREA RANGER HOUSE R3-B JABIRU HOUSING JABIRU, N.T.	Drawing Title PERSPECTIVE VIEWS	Client Gundjeihmi Aboriginal Corporation. Scale as shown on A3 / Date 02/12/2021 Job No. J21403-R3B / Dwg. No. DO of 5

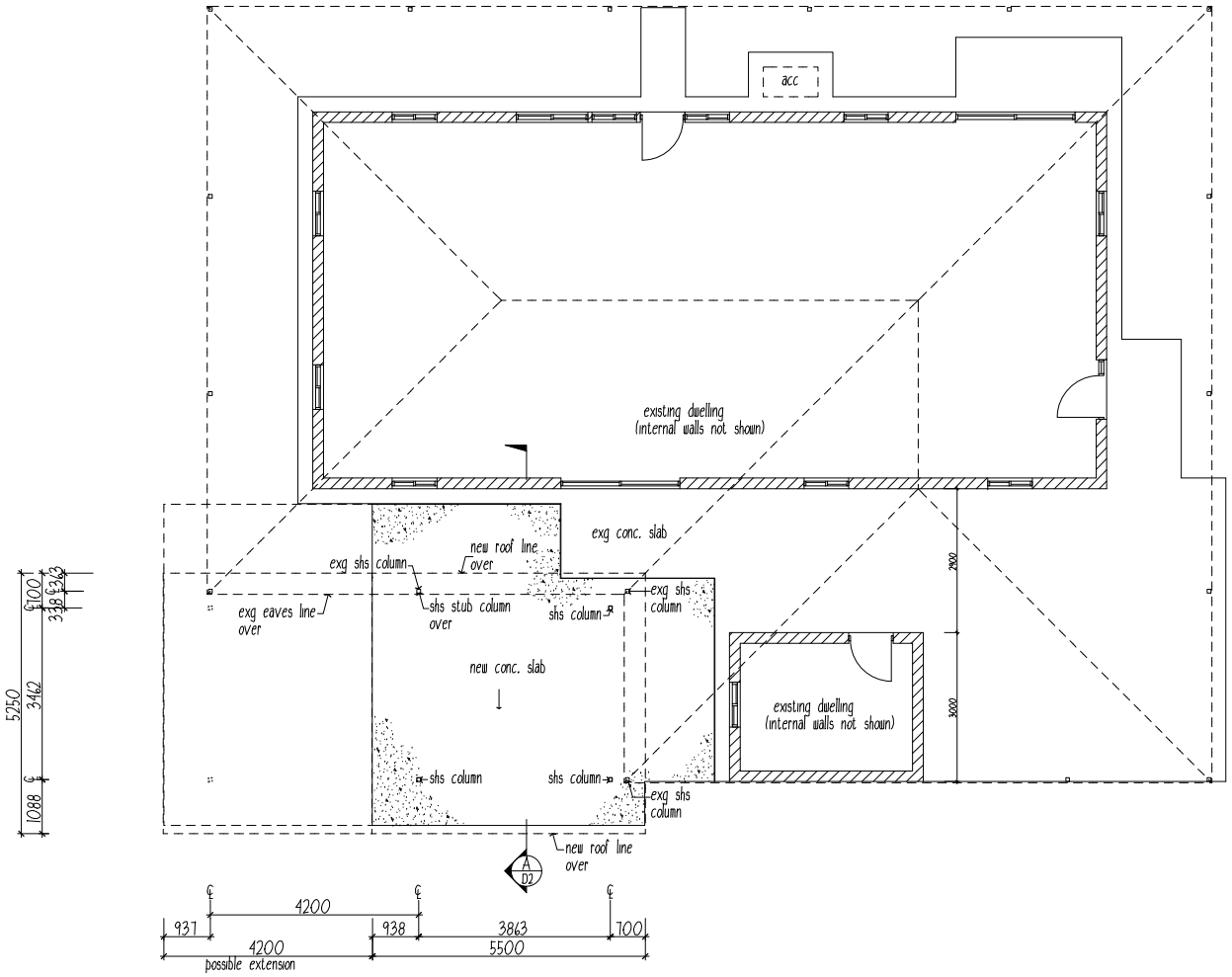

ELEVATION
refer Dwg. No. D2

LAYOUT PLAN
1 : 100

GENERAL NOTES

1. These drawings contain information required for obtaining abuilding permit, they are not detailed sufficiently for a specification for a building contract with a builder. An additional specification should be written to include painting, electrical & plumbing fittings & secondary fixings.
2. All work shall be in accordance with the Building Code of Australia & comply with the relevant current Standards Association of Australia codes and the local statutory authorities' regulations, except where varied by the contract documents.
3. All dimensions are in milimetres unless stated otherwise. All levels are expressed in metres. Verify all dimensions relevant to setting out and off-site work before construction and fabrication is commenced. Do not scale the drawings unless noted otherwise.
4. Read drawings in conjunction with all other consultants' drawings and specifications and with such other written instructions as may be issued during the course of the contract Refer all discrepancies to the Superintendent for decision before proceeding with the work.
5. During construction maintain the structure in a stable condition and ensure no part is overstressed under construction activities.
6. Seek approval for all substitutions from the Superintendent before the work commences.
7. Keep the site in a clean & tidy condition thoughout construction & at the completion of work remove all litter & debris to the satisfaction of the superintendent.

CERTIFIED AS STRUCTURALLY ADEQUATE

KFB Engineers Civil & Structural
1/38-42 Pease St, Cairns | PO Box 927, Cairns Q 4870
P: 07 40320492 | F: 07 40320092 | E: email@kfbeng.com.au

Date: 2/12/21 Signed:
Job No: K-9712
NT Reg. 33968ES

Wilkins Drafting Service
Ph.0457889990

Project Title PROPOSED UNDERCOVER AREA RANGER HOUSE R3-B JABIRU HOUSING JABIRU, N.T.	Drawing Title LAYOUT PLAN GENERAL NOTES	Client Gundjeihmi Aboriginal Corporation.	
		Scale as shown on A3	Date 02/12/2021
		Job No. J21403-R3B	Dwg. No. D1 of 5

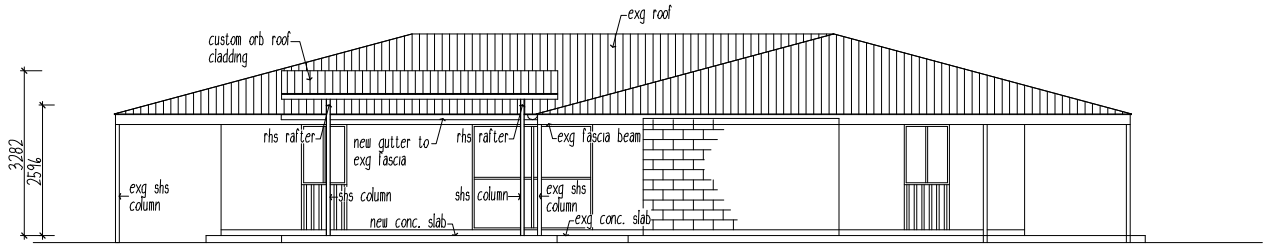

ELEVATION 1
1 : 100

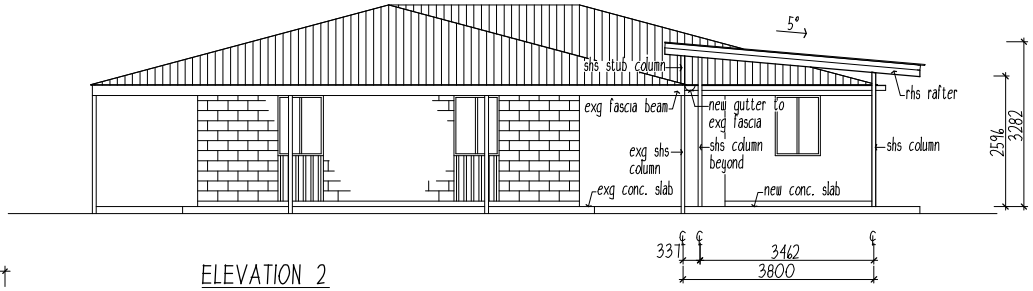

ELEVATION 2
1 : 100

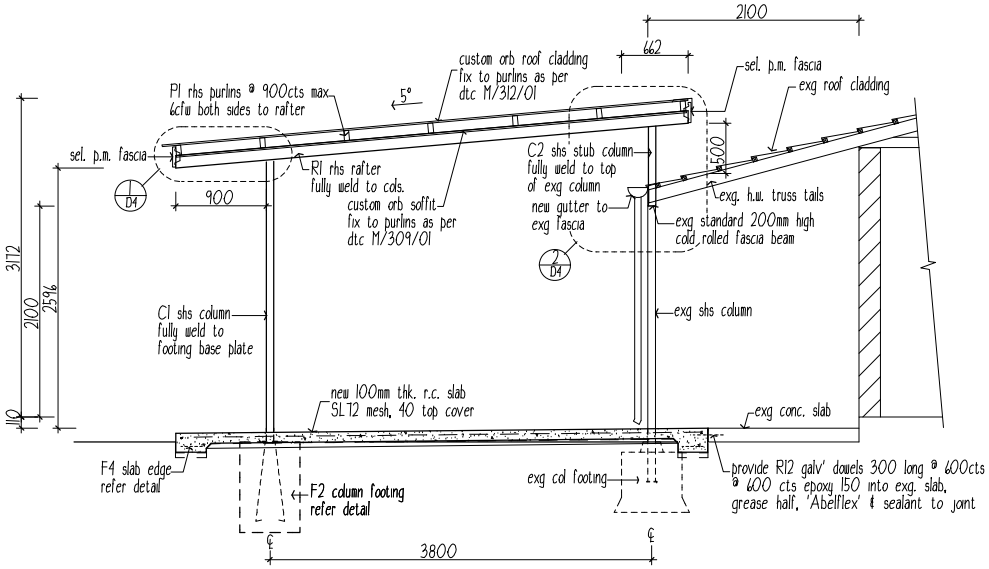

SECTION A
1 : 50

LEGEND :

F1 600 x 600 x 900deep conc. footing refer typical detail
F2 600dia. x 900deep conc. footing refer typical detail
F3 600dia. x 900deep conc. footing refer typical detail
F4 300wide x 200deep slab edge thickening refer typical detail
C1 75 x 4 SHS column
C2 75 x 4 SHS stub column
R1 125 x 75 x 4 RHS rafter
P1 100 x 50 x 2 RHS purlin

CERTIFIED AS STRUCTURALLY ADEQUATE

KFB Engineers — Civil & Structural
1/38-42 Pease St, Cairns | PO Box 927, Cairns Q 4870
P: 07 40320492 | F: 07 40320092 | E: email@kfbeng.com.au

Date: 2/12/21 Signed:
Job No: K-9712
NT Reg. 33968ES

Wilkins Drafting Service
Ph.0457889990

Project Title: PROPOSED UNDERCOVER AREA RANGER HOUSE R3-B JABIRU HOUSING JABIRU, N.T.	Drawing Title: ELEVATIONS SECTION A	Client: Gundjeihmi Aboriginal Corporation.	
		Scale: as shown on A3	Date: 02/12/2021
		Job No.: J21403-R3B	Dwg. No.: D2 of 5

LEGEND :

F1 600sq x 900deep conc. footing
refer typical detail

F2 600dia. or square x 900deep conc. footing
refer typical detail

F3 600sq. x 900deep conc. footing
refer typical detail

F4 300wide x 200deep slab edge thickening
refer typical detail

C1 75 x 4 SHS column

C2 75 x 4 SHS stub column

provide R12 galv' dowels 300 long @ 600cts
@ 600 cts epoxy 150 into exg. slab,
grease half, 'Abelflex' & sealant to joint

2-N12 bars 1200 long tied under top
mesh to re-entrant corners.

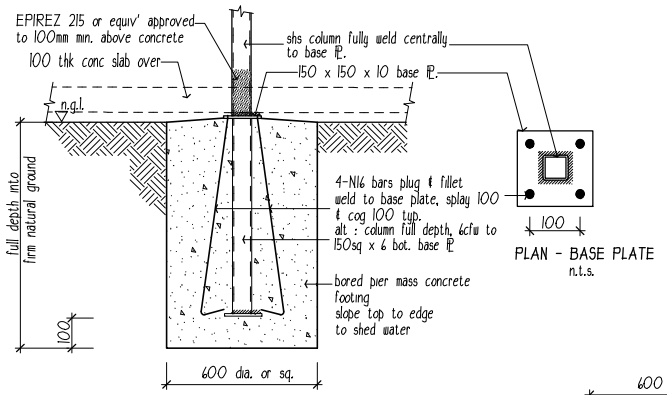

PLAN - BASE PLATE
n.t.s.

DETAIL YY - F2 - TYPICAL DETAIL
1 : 20

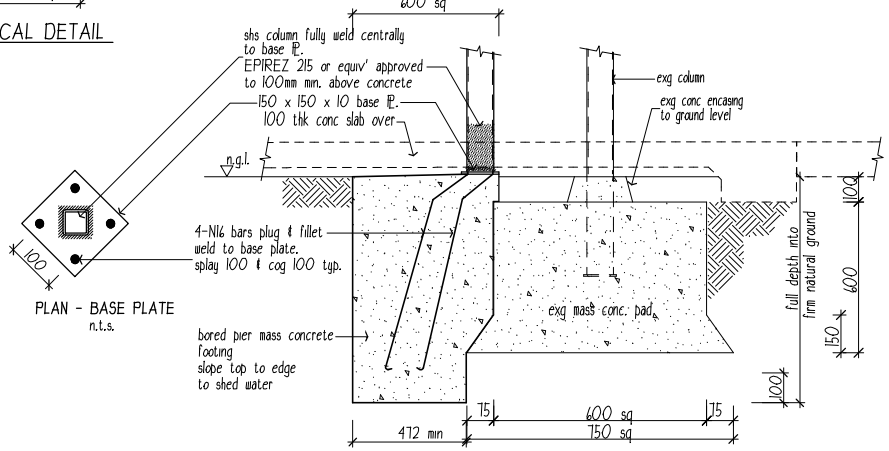

PLAN - BASE PLATE
n.t.s.

DETAIL ZZ - F3 - TYPICAL DETAIL
1 : 20

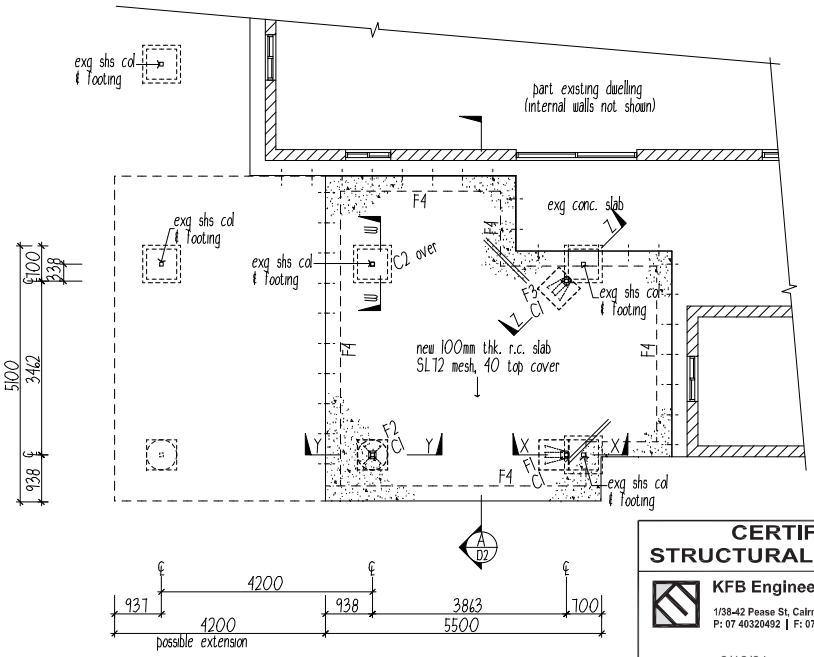

SLAB/FOOTING PLAN
1 : 100

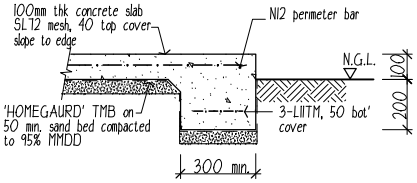

F4 - TYPICAL DETAIL
1 : 20

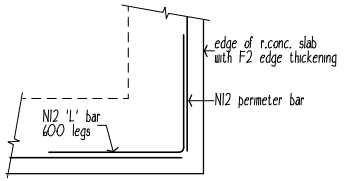

TYPICAL CORNER REINF' PLAN DETAIL
N.T.S.

CERTIFIED AS STRUCTURALLY ADEQUATE

KFB Engineers — Civil & Structural
1/38-42 Pease St, Cairns | PO Box 927, Cairns Q 4870
P: 07 40320492 | F: 07 40320092 | E: email@kfbeng.com.au

Date: 2/12/21 Signed:
Job No: K-9712 NT Reg. 33968ES

Wilkins Drafting Service Ph.0457889990	Project Title: PROPOSED UNDERCOVER AREA RANGER HOUSE R3-B JABIRU HOUSING JABIRU, N.T.	Drawing Title: SLAB/FOOTING PLAN TYPICAL FOOTING DETAILS	Client: Gundjeihmi Aboriginal Corporation.
			Scale: as shown on A3 — Date: 02/12/2021
			Job No.: J21403-R3B — Dwg. No.: D3 of 5

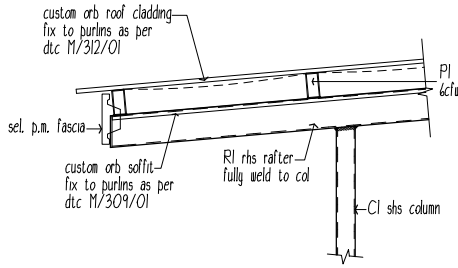

DETAIL 1 (D2)
1 : 20

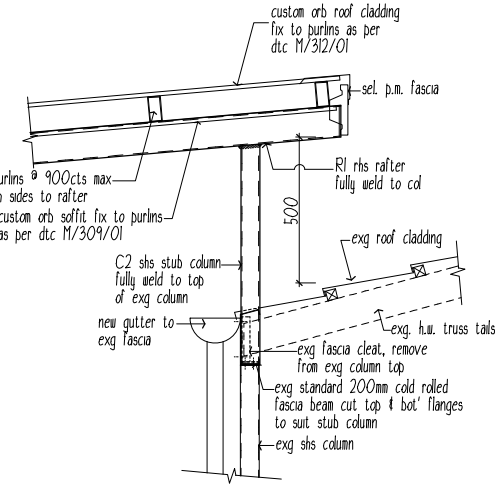

DETAIL 2 (D2)
1 : 20

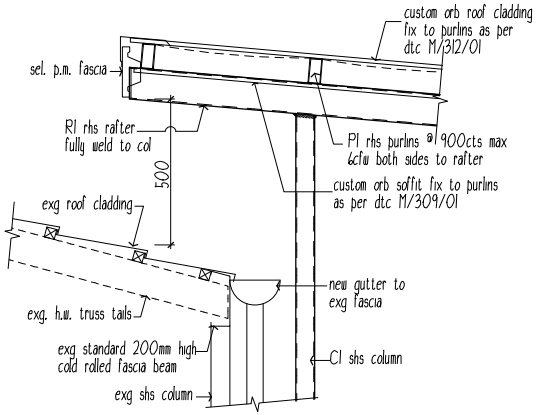

DETAIL 3 (--)
1 : 20

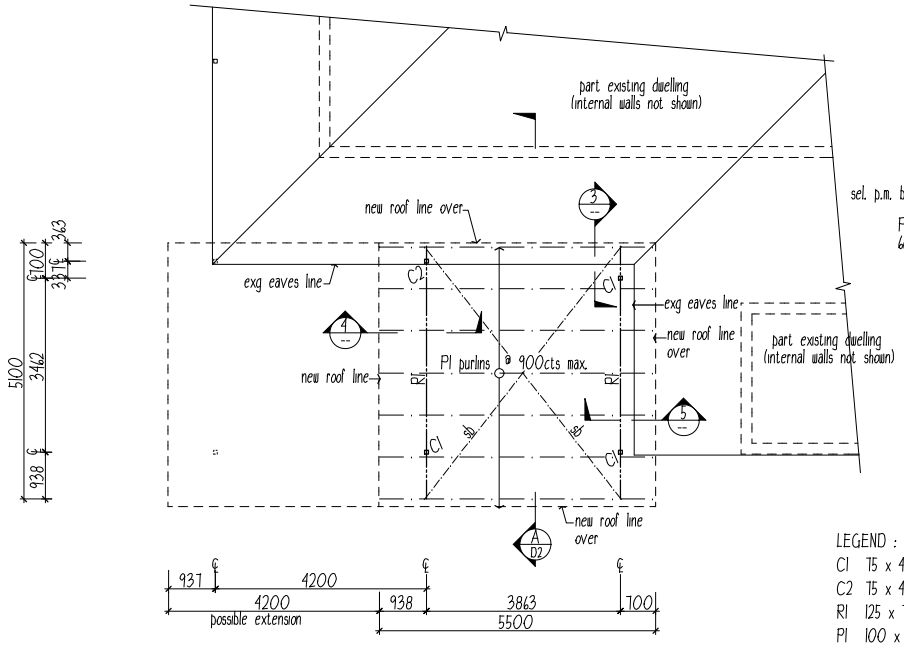

ROOF FRAMING PLAN
1 : 100

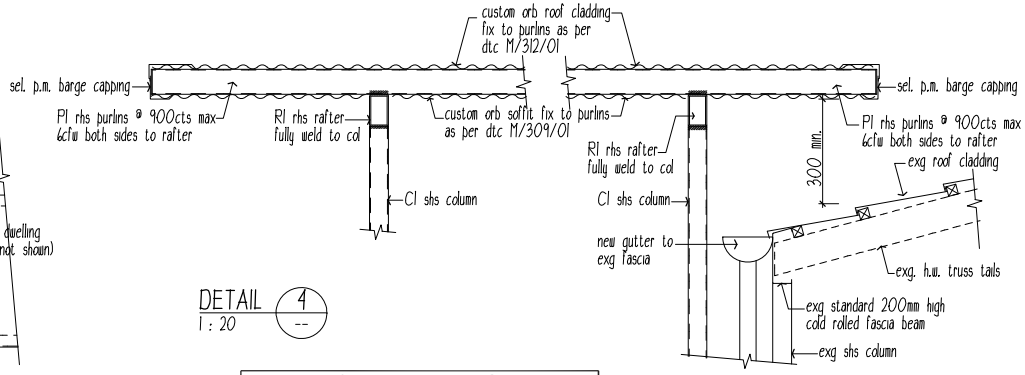

DETAIL 4 (--)
1 : 20

DETAIL 5 (--)
1 : 20

LEGEND :

C1 75 x 4 SHS column
C2 75 x 4 SHS stub column
R1 125 x 75 x 4 RHS rafter
P1 100 x 50 x 2 RHS purlin

CERTIFIED AS STRUCTURALLY ADEQUATE

KFB Engineers — Civil & Structural
1/38-42 Pease St, Cairns | PO Box 927, Cairns Q 4870
P: 07 40320492 | F: 07 40320092 | E: email@kfbeng.com.au

Date: 2/12/21 Signed:
Job No: K-9712 NT Reg. 33968ES

Wilkins Drafting Service
Ph.0457889990

Project Title
PROPOSED UNDERCOVER AREA
RANGER HOUSE R3-B
JABIRU HOUSING
JABIRU, N.T.

Drawing Title
ROOF FRAMING PLAN
DETAILS 1 - 5

Client: Gundjeihmi Aboriginal Corporation.
Scale: as shown on A3
Date: 02/12/2021
Job No.: J21403-R3B
Dwg. No.: D4 of 5

NOTES

GENERAL

1. All work shall be in accordance with the Building Code of Australia & comply with the relevant current Standards Association of Australia codes and the local statutory authorities' regulations, except where varied by the contract documents.
2. Verify all dimensions relevant to setting out and off-site work before construction and fabrication is commenced. Do not scale the drawings unless noted otherwise.
3. All dimensions are in millimetres unless stated otherwise. All levels are expressed in metres.
4. Read drawings in conjunction with all other consultants' drawings and specifications and with such other written instructions as may be issued during the course of the contract Refer all discrepancies to the Superintendent for decision before proceeding with the work.
5. During construction maintain the structure in a stable condition and ensure no part is overstressed under construction activities.
6. Seek approval for all substitutions from the Superintendent before the work commences.
7. Keep the site in a clean & tidy condition thoughout construction & at the completion of work remove all litter & debris to the satisfaction of the superintendent.

DESIGN CRITERIA

1. Dead & live loads - in accordance with AS1170.1 - 2011
2. The Design Wind Criteria is as follows :

Region	C	
Design Wind Speed	V500	Vr = 69m/s
Terrain Category	2.5	
Internal Pressure Coefficient	+0.7 / -0.65	

External Pressure Coefficient in accordance with AS1170 - 2011

3. Foundation design bearing capacity = 100kPa (allowable).

Wind Classification C2 (AS4055)

Ultimate and Serviceability Limit State Design Wind Pressures

Wind Classification	Design gust wind speed (m/s)		Design pressures for windows (kPa)			
	Vh,u	Vh,s	Greater than 1.2m from corners		Up to 1.2m from corners	
	ULS	SLS	ULS	SLS	ULS	SLS
C1	50	32	±1.80	±0.55	-2.70	-0.83
C2	61	39	±2.68	±0.88	-4.02	-1.23
C3	74	47	±3.94	±1.19	-5.91	-1.79

EARTHWORKS

1. Earthworks construction shall comply with AS3798 & AS2870.
2. Excavation & service trenches shall comply with the following guidelines unless otherwise approved by the engineer

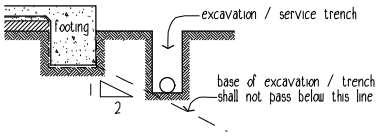

TERMITE MANAGEMENT SYSTEM

1. Termite Management System to be installed & certified by an approved applicator in accordance with AS 3660.1.
2. Provide Min. 300 wide x 50mm concrete mowing strip over perimeter reticulation system as to AS3660.1
3. A durable certificate is to be fixed in the meter box on completion.

FOOTINGS

1. Found all footings in original undisturbed ground having a safe bearing capacity of 150 kPa as noted on drawings. Before any concrete is placed, ensure the safe bearing capacity is verified.
2. Backfill sewers, stormwater drains and other in-ground services adjacent to buildings, if laid before footings are constructed, with approved fill placed in 200mm Max. layers and compacted to 95% MMDD.
   If laid after footings are constructed, avoid undermining of footings by either fully shoring trenches, or keeping excavation outside an influence line extended downwards at a slope of 1 in 2 from the the bottom corner of all footings. Backfill trenches as noted above.
3. Use selected fill (gravel, decomposed or broken rock) free from clay clumps and organic matter, conforming with the following grading requirements :

AS METRIC SIEVE	% PASSING BY WEIGHT	AS METRIC SIEVE	% PASSING BY WEIGHT
75.0 mm	100	2.36 mm	20 - 50
9.5 mm	30 - 100	0.075 mm	5 - 25

   Strip the area of the works of all top soil and deleterious material prior to placement of fill or compaction. Compact fill up to 150 mm below slab level in 150 mm layers to 95% MMDD.
4. Compact fill in the 150 mm layer immediately below slab level to 95% MMDD. Compact sand blinding layer below concrete slab by vibration plate or flooding to 95% MMDD.
5. Backfill over excavation with lean mix concrete.
6. Builder to confirm site classification "S" to AS2870

DRAINAGE

1. The contractor shall determine the exact location of existing services prior to any installation or commencement of work.

CONCRETE

1. All slabs & footings shall be constructed to comply with the requirements of AS2870 - 2011
2. Concrete slump shall be 80 ± 15mm. No admixtures to be used without approval from the engineer.
3. Concrete cover to be maintained by the use of approved chairs at nominal 800cts. Conduits & pipes shall not be placed within concrete cover.
4. Mesh reinforcement laps shall be at least one full wire spacing plus 25mm. Reinforcement shall be in accordance with AS4671.
5. Continuously cure slabs for a minimum of 7 days after casting by ponding, covering with a waterproof membrane or other approved means.

STEEL

1. All structural steelwork shall comply with AS 4100 - SAA Steel Struct. Code & associated Australian Standards.
2. Ensure welding is performed by an experienced operator in accordance with AS 1554.
3. Use hot dipped galvanised commerial bolts (Grade 4.6/S) to AS1111 and AS 1112, tightened to a snug tight fit unless otherwise shown. Where bolts are designated grade 8.8/S, use high strength bolts to AS 1252, tightened to a snug tigh fit.
   Where bolts are designated 8.8/TF or grade 8.8/TB use high strength steel bolts (grade 8.8/S) to AS 1252, fully tensioned in accordance with AS 1511.
4. During construction provide and leave in place, untill permanent bracing elements are constructed, such temporary bracing as is necessary to stabilise the structure during erection.
5. Seal the ends of all tubular members with nominal thickness plates and continuous fillet welds unless otherwise shown.
6. Except where otherwise shown fully weld connections with 6mm continuous fillet general purpose (G.P.) welds for the full contact area. Special purpoes welds are designated (S.P.)
7. Unless otherwise specified, paint all external steelwork with one shop coat of Inorganic Zinc Silicate primer after blast cleaning to a class 2.5 finish. Touch up damaged areas with cold galv after power cleaning. members encased in concrete, fire sprayed or HSTF bolted connections must not be painted
8. Unless otherwise specified paint all internal steelwork with one shop coat of Red Oxide Zinc Phoshate primer after blast cleaning to a class 2 finish. Touch up damaged areas as required after power cleaning. Alternatively for RHS, use 'Duragal' and touch up with Dimet Zeden or equal and paint for long term protection to manufacturers recommendations.
9. Unless otherwise specified paint steelwork below finished surface level and not concrete encased with high build epoxy.
10. Unless otherwise specified paint all steelwork one shop coat of Red Oxide Zinc Phosphate primer. Do not paint members encased in concrete, fire sprayed or friction grip bolted connections.
11. Protective coatings to all external steelwork to comply with BCA-96 Table 3.4.4.2.

TIMBER

1. Structural timber shall be minimum stress grade F17 (U.N.O.) to comply with AS1720

SITE DRAINAGE

1. Ground adjacent to building shall be graded away to fall at least 50mm over 1 metre width to satisfy BCA clause 3.1.2.3 surface water drainage.

CERTIFIED AS STRUCTURALLY ADEQUATE

KFB Engineers Civil & Structural
1/38-42 Pease St, Cairns | PO Box 927, Cairns Q 4870
P: 07 40320492 | F: 07 40320092 | E: email@kfbeng.com.au

Date: 2/12/21 Signed:
Job No: K-9712 NT Reg. 33968ES

Wilkins Drafting Service
Ph.0457889990

Project Title	Drawing Title	Client	
PROPOSED UNDERCOVER AREA RANGER HOUSE R3-B JABIRU HOUSING JABIRU, N.T.	STRUCTURAL NOTES	Gundjeihmi Aboriginal Corporation.	
		Scale as shown on A3	Date 02/12/2021
		Job No. J21403-R3B	Dwg. No. D5 of 5

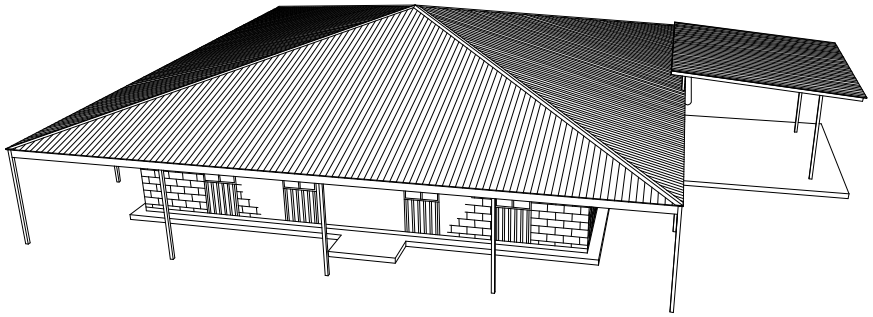

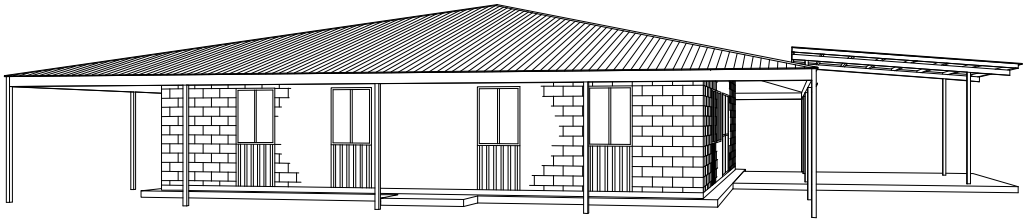

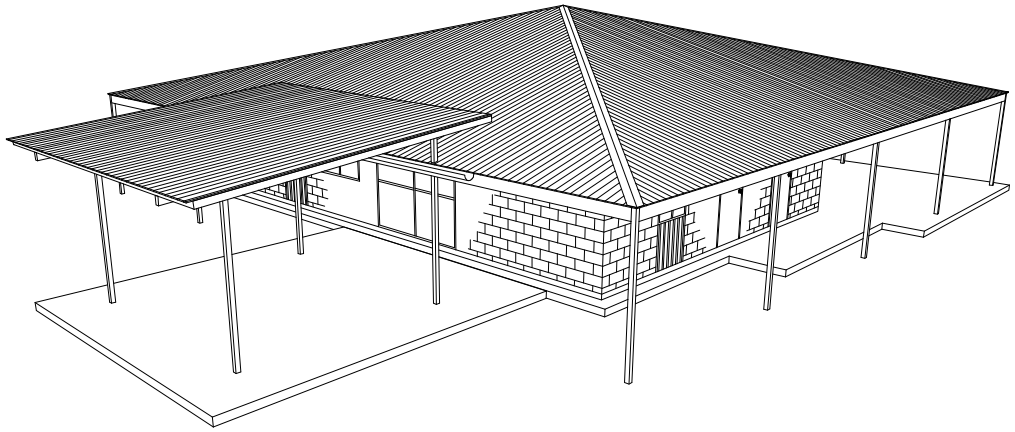

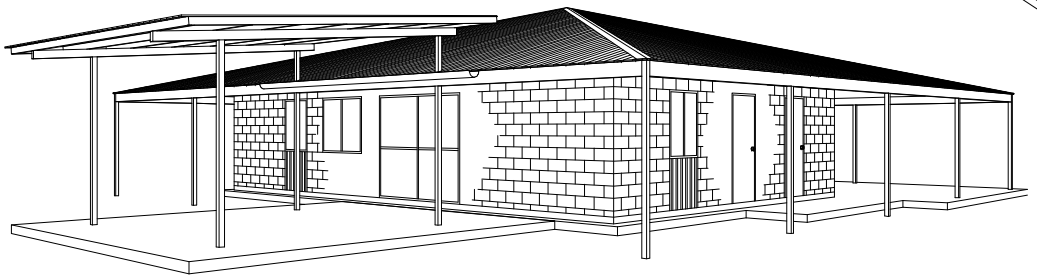

Wilkins Drafting Service Ph.0457889990	Project Title PROPOSED UNDERCOVER AREA RANGER HOUSE R3-C JABIRU HOUSING JABIRU, N.T.	Drawing Title PERSPECTIVE VIEWS	Client Gundjeihmi Aboriginal Corporation. Scale as shown on A3 / Date 02/12/2021 Job No. J21403-R3C / Dwg. No. DO of 5

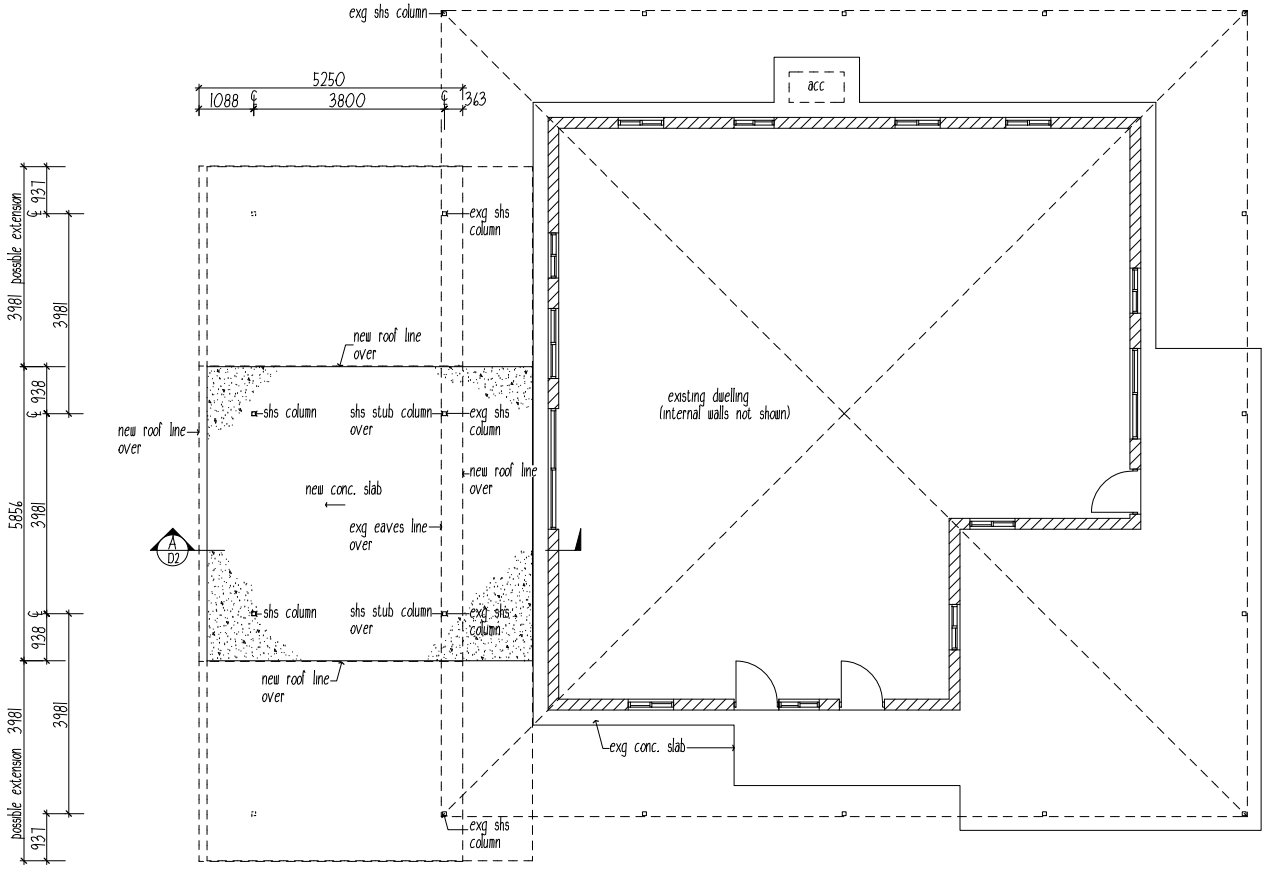

ELEVATION
refer Dwg. No. D2

LAYOUT PLAN
1 : 100

GENERAL NOTES

1. These drawings contain information required for obtaining abuilding permit, they are not detailed sufficiently for a specification for a building contract with a builder. An additional specification should be written to include painting, electrical & plumbing fittings & secondary fixings.
2. All work shall be in accordance with the Building Code of Australia & comply with the relevant current Standards Association of Australia codes and the local statutory authorities' regulations, except where varied by the contract documents.
3. All dimensions are in millimetres unless stated otherwise. All levels are expressed in metres. Verify all dimensions relevant to setting out and off-site work before construction and fabrication is commenced. Do not scale the drawings unless noted otherwise.
4. Read drawings in conjunction with all other consultants' drawings and specifications and with such other written instructions as may be issued during the course of the contract Refer all discrepancies to the Superintendent for decision before proceeding with the work.
5. During construction maintain the structure in a stable condition and ensure no part is overstressed under construction activities.
6. Seek approval for all substitutions from the Superintendent before the work commences.
7. Keep the site in a clean & tidy condition thoughout construction & at the completion of work remove all litter & debris to the satisfaction of the superintendent.

CERTIFIED AS STRUCTURALLY ADEQUATE

KFB Engineers Civil & Structural
1/38-42 Pease St, Cairns | PO Box 927, Cairns Q 4870
P: 07 40320492 | F: 07 40320092 | E: email@kfbeng.com.au

Date: 2/12/21 Signed:
Job No: K-9712 NT Reg. 33968ES

Wilkins Drafting Service
Ph.0457889990

Project Title	Drawing Title	Client	
PROPOSED UNDERCOVER AREA RANGER HOUSE R3-C JABIRU HOUSING JABIRU, N.T.	LAYOUT PLAN GENERAL NOTES	Gundjeihmi Aboriginal Corporation.	
		Scale: as shown on A3	Date: 02/12/2021
		Job No.: J21403-R3C	Dwg. No.: D1 of 5

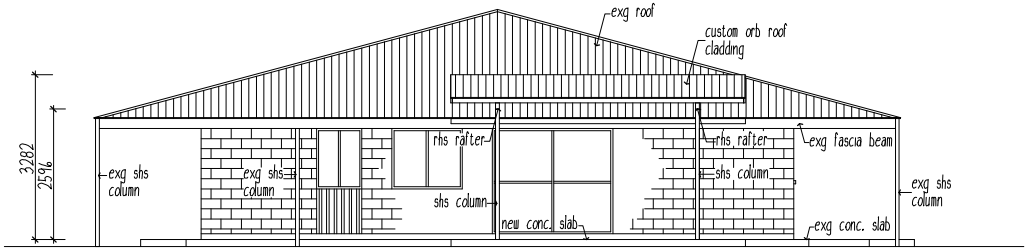

ELEVATION 1
1 : 100

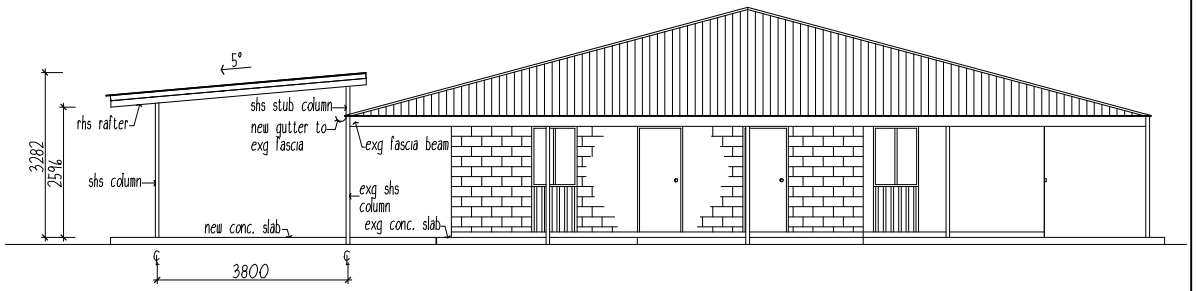

ELEVATION 2
1 : 100

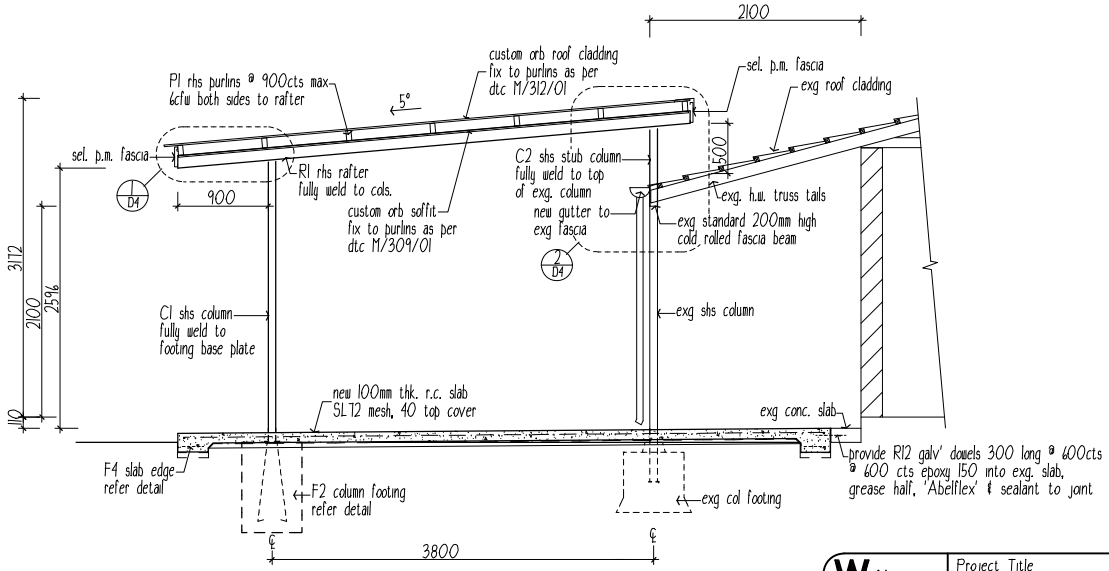

SECTION A
1 : 50

LEGEND :

F2 600dia. x 900deep conc. footing
refer typical detail

F4 300wide x 200deep slab edge thickening
refer typical detail

C1 75 x 4 SHS column

C2 75 x 4 SHS stub column

R1 125 x 75 x 4 RHS rafter

P1 100 x 50 x 2 RHS purlin

CERTIFIED AS STRUCTURALLY ADEQUATE

KFB Engineers Civil & Structural

1/38-42 Pease St, Cairns | PO Box 927, Cairns Q 4870
P: 07 40320492 | F: 07 40320092 | E: email@kfbeng.com.au

Date: 2/12/21 Signed:

Job No: K-9712 NT Reg. 33968ES

Wilkins Drafting Service
Ph.0457889990

Project Title
PROPOSED UNDERCOVER AREA
RANGER HOUSE R3-C
JABIRU HOUSING
JABIRU, N.T.

Drawing Title
ELEVATIONS
SECTION A

Client: Gundjeihmi Aboriginal Corporation.

Scale: as shown on A3 | Date: 02/12/2021

Job No.: J21403-R3C | Dwg. No.: D2 of 5

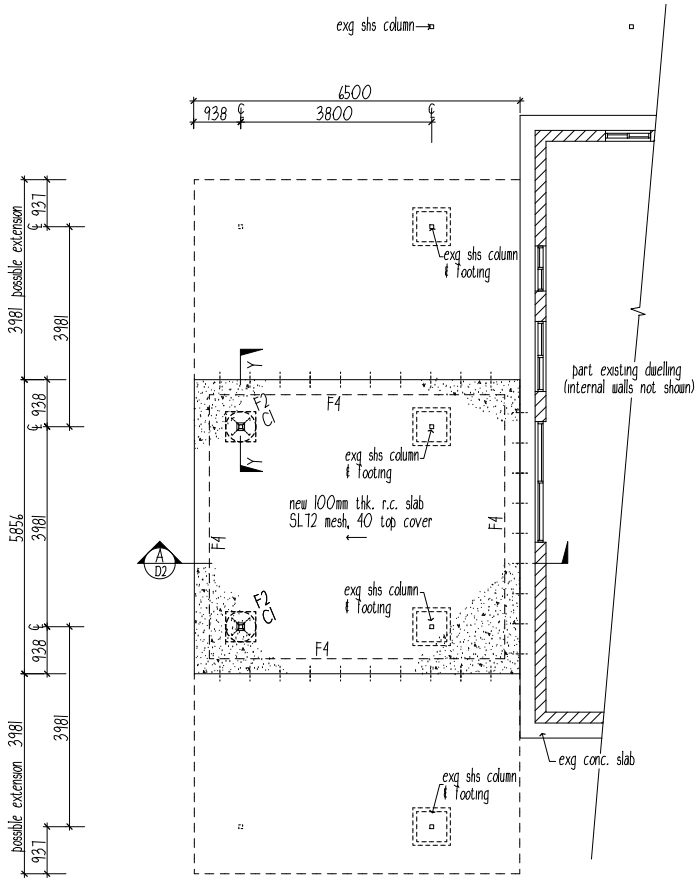

SLAB/FOOTING PLAN
1 : 100

LEGEND :

F2 600dia. or square x 900deep conc. footing
refer typical detail

F4 300wide x 200deep slab edge thickening
refer typical detail

C1 75 x 4 SHS column

provide R12 galv' dowels 300 long @ 600cts @ 600 cts epoxy 150 into exg. slab, grease half, 'Abelflex' & sealant to joint

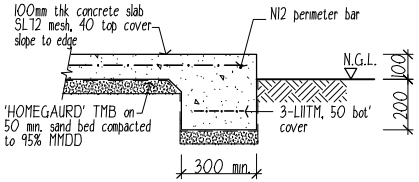

F4 - TYPICAL DETAIL
1 : 20

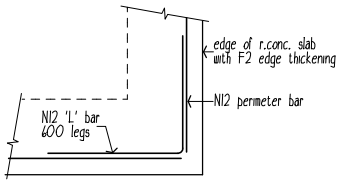

TYPICAL CORNER REINF' PLAN DETAIL
N.T.S.

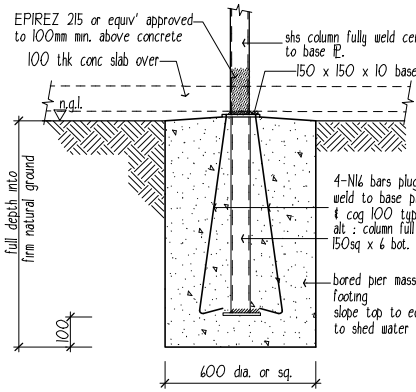

DETAIL YY - F2 - TYPICAL DETAIL
1 : 20

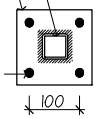

PLAN - BASE PLATE
n.t.s.

CERTIFIED AS STRUCTURALLY ADEQUATE

KFB Engineers — Civil & Structural
1/38-42 Pease St, Cairns | PO Box 927, Cairns Q 4870
P: 07 40320492 | F: 07 40320092 | E: email@kfbeng.com.au

Date: 2/12/21 Signed:
Job No: K-9712 NT Reg. 33968ES

Wilkins Drafting Service Ph.0457889990	Project Title: PROPOSED UNDERCOVER AREA RANGER HOUSE R3-C JABIRU HOUSING JABIRU, N.T.	Drawing Title: SLAB/FOOTING PLAN TYPICAL FOOTING DETAILS	Client: Gundjeihmi Aboriginal Corporation.
			Scale: as shown on A3 — Date: 02/12/2021
			Job No.: J21403-R3C — Dwg. No.: D3 of 5

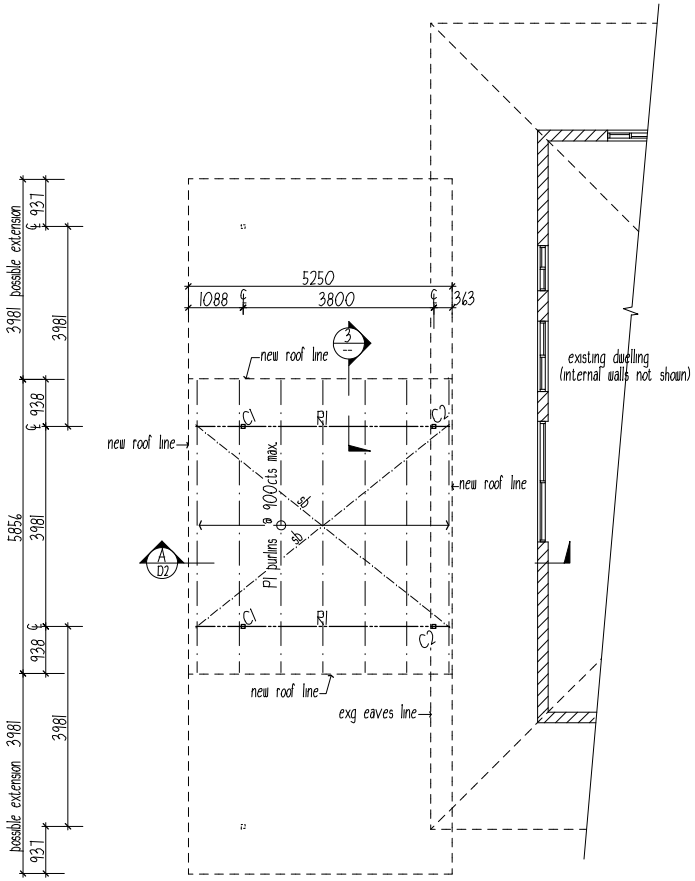

ROOF FRAMING PLAN
1 : 100

LEGEND :

C1 75 x 4 SHS column
C2 75 x 4 SHS stub column
R1 125 x 75 x 4 RHS rafter
P1 100 x 50 x 2 RHS purlin

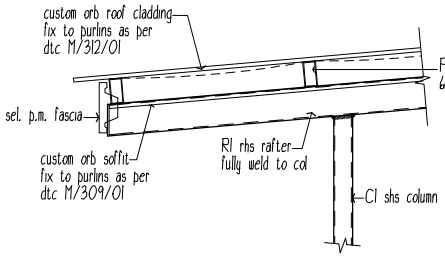

DETAIL 1 / D2
1 : 20

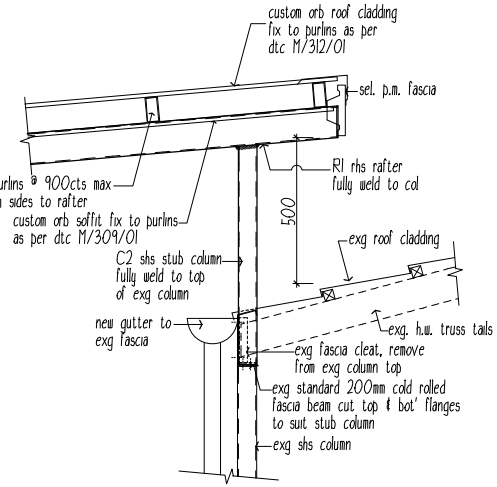

DETAIL 2 / D2
1 : 20

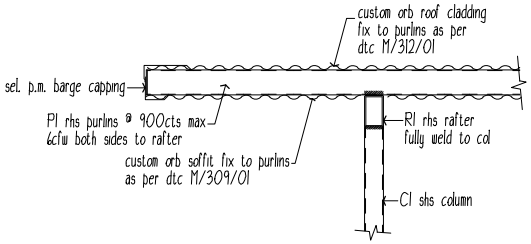

DETAIL 3 / --
1 : 20

CERTIFIED AS STRUCTURALLY ADEQUATE

KFB Engineers — Civil & Structural
1/38-42 Pease St, Cairns | PO Box 927, Cairns Q 4870
P: 07 40320492 | F: 07 40320092 | E: email@kfbeng.com.au

Date: 2/12/21 Signed:
Job No: K-9712 NT Reg. 33968ES

Wilkins Drafting Service
Ph.0457889990

Project Title	Drawing Title	Client	
PROPOSED UNDERCOVER AREA RANGER HOUSE R3-C JABIRU HOUSING JABIRU, N.T.	ROOF FRAMING PLAN DETAILS 1 - 3	Gundjeihmi Aboriginal Corporation.	
		Scale: as shown on A3	Date: 02/12/2021
		Job No.: J21403-R3C	Dwg. No.: D4 of 5

NOTES

GENERAL

1. All work shall be in accordance with the Building Code of Australia & comply with the relevant current Standards Association of Australia codes and the local statutory authorities' regulations, except where varied by the contract documents.
2. Verify all dimensions relevant to setting out and off-site work before construction and fabrication is commenced. Do not scale the drawings unless noted otherwise.
3. All dimensions are in millimetres unless stated otherwise. All levels are expressed in metres.
4. Read drawings in conjunction with all other consultants' drawings and specifications and with such other written instructions as may be issued during the course of the contract Refer all discrepancies to the Superintendent for decision before proceeding with the work.
5. During construction maintain the structure in a stable condition and ensure no part is overstressed under construction activities.
6. Seek approval for all substitutions from the Superintendent before the work commences.
7. Keep the site in a clean & tidy condition thoughout construction & at the completion of work remove all litter & debris to the satisfaction of the superintendent.

DESIGN CRITERIA

1. Dead & live loads - in accordance with AS1170.1 - 2011
2. The Design Wind Criteria is as follows :

Region	C
Design Wind Speed	V500 Vr = 69m/s
Terrain Category	2.5
Internal Pressure Coefficient	+0.7 / -0.65

External Pressure Coefficient in accordance with AS1170 - 2011

3. Foundation design bearing capacity = 100kPa (allowable).

Wind Classification C2 (AS4055)

Ultimate and Serviceability Limit State Design Wind Pressures

Wind Classification	Design gust wind speed (m/s)		Design pressures for windows (kPa)			
	Vh,u	Vh,s	Greater than 1.2m from corners		Up to 1.2m from corners	
	ULS	SLS	ULS	SLS	ULS	SLS
C1	50	32	±1.80	±0.55	-2.70	-0.83
C2	61	39	±2.68	±0.88	-4.02	-1.23
C3	74	47	±3.94	±1.19	-5.91	-1.79

EARTHWORKS

1. Earthworks construction shall comply with AS3798 & AS2870.
2. Excavation & service trenches shall comply with the following guidelines unless otherwise approved by the engineer

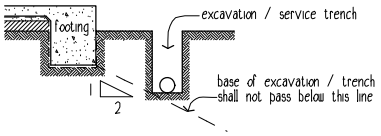

TERMITE MANAGEMENT SYSTEM

1. Termite Management System to be installed & certified by an approved applicator in accordance with AS 3660.1.
2. Provide Min. 300 wide x 50mm concrete mowing strip over perimeter reticulation system as to AS3660.1
3. A durable certificate is to be fixed in the meter box on completion.

FOOTINGS

1. Found all footings in original undisturbed ground having a safe bearing capacity of 150 kPa as noted on drawings. Before any concrete is placed, ensure the safe bearing capacity is verified.
2. Backfill sewers, stormwater drains and other in-ground services adjacent to buildings, if laid before footings are constructed, with approved fill placed in 200mm Max. layers and compacted to 95% MMDD.
   If laid after footings are constructed, avoid undermining of footings by either fully shoring trenches, or keeping excavation outside an influence line extended downwards at a slope of 1 in 2 from the the bottom corner of all footings. Backfill trenches as noted above.
3. Use selected fill (gravel, decomposed or broken rock) free from clay clumps and organic matter, conforming with the following grading requirements :

AS METRIC SIEVE	% PASSING BY WEIGHT	AS METRIC SIEVE	% PASSING BY WEIGHT
75.0 mm	100	2.36 mm	20 - 50
9.5 mm	30 - 100	0.075 mm	5 - 25

   Strip the area of the works of all top soil and deleterious material prior to placement of fill or compaction. Compact fill up to 150 mm below slab level in 150 mm layers to 95% MMDD.
4. Compact fill in the 150 mm layer immediately below slab level to 95% MMDD. Compact sand blinding layer below concrete slab by vibration plate or flooding to 95% MMDD.
5. Backfill over excavation with lean mix concrete.
6. Builder to confirm site classification "S" to AS2870

DRAINAGE

1. The contractor shall determine the exact location of existing services prior to any installation or commencement of work.

CONCRETE

1. All slabs & footings shall be constructed to comply with the requirements of AS2870 - 2011
2. Concrete slump shall be 80 ± 15mm. No admixtures to be used without approval from the engineer.
3. Concrete cover to be maintained by the use of approved chairs at nominal 800cts. Conduits & pipes shall not be placed within concrete cover.
4. Mesh reinforcement laps shall be at least one full wire spacing plus 25mm. Reinforcement shall be in accordance with AS4671.
5. Continuously cure slabs for a minimum of 7 days after casting by ponding, covering with a waterproof membrane or other approved means.

STEEL

1. All structural steelwork shall comply with AS 4100 - SAA Steel Struct. Code & associated Australian Standards.
2. Ensure welding is performed by an experienced operator in accordance with AS 1554.
3. Use hot dipped galvanised commerial bolts (Grade 4.6/S) to AS1111 and AS 1112, tightened to a snug tight fit unless otherwise shown. Where bolts are designated grade 8.8/S, use high strength bolts to AS 1252, tightened to a snug tigh fit.
   Where bolts are designated 8.8/TF or grade 8.8/TB use high strength steel bolts (grade 8.8/S) to AS 1252, fully tensioned in accordance with AS 1511.
4. During construction provide and leave in place, untill permanent bracing elements are constructed, such temporary bracing as is necessary to stabilise the structure during erection.
5. Seal the ends of all tubular members with nominal thickness plates and continuous fillet welds unless otherwise shown.
6. Except where otherwise shown fully weld connections with 6mm continuous fillet general purpose (G.P.) welds for the full contact area. Special purpoes welds are designated (S.P.)
7. Unless otherwise specified, paint all external steelwork with one shop coat of Inorganic Zinc Silicate primer after blast cleaning to a class 2.5 finish. Touch up damaged areas with cold galv after power cleaning. members encased in concrete, fire sprayed or HSTF bolted connections must not be painted
8. Unless otherwise specified paint all internal steelwork with one shop coat of Red Oxide Zinc Phoshate primer after blast cleaning to a class 2 finish. Touch up damaged areas as required after power cleaning. Alternatively for RHS, use 'Duragal' and touch up with Dimet Zeden or equal and paint for long term protection to manufacturers recommendations.
9. Unless otherwise specified paint steelwork below finished surface level and not concrete encased with high build epoxy.
10. Unless otherwise specified paint all steelwork one shop coat of Red Oxide Zinc Phosphate primer. Do not paint members encased in concrete, fire sprayed or friction grip bolted connections.
11. Protective coatings to all external steelwork to comply with BCA-96 Table 3.4.4.2.

TIMBER

1. Structural timber shall be minimum stress grade F17 (U.N.O.) to comply with AS1720

SITE DRAINAGE

1. Ground adjacent to building shall be graded away to fall at least 50mm over 1 metre width to satisfy BCA clause 3.1.2.3 surface water drainage.

CERTIFIED AS STRUCTURALLY ADEQUATE

KFB Engineers Civil & Structural
1/38-42 Pease St, Cairns | PO Box 927, Cairns Q 4870
P: 07 40320492 | F: 07 40320092 | E: email@kfbeng.com.au

Date: 2/12/21 Signed:
Job No: K-9712 NT Reg. 33968ES

Wilkins Drafting Service
Ph.0457889990

Project Title	Drawing Title	Client	
PROPOSED UNDERCOVER AREA RANGER HOUSE R3-C JABIRU HOUSING JABIRU, N.T.	STRUCTURAL NOTES	Gundjeihmi Aboriginal Corporation.	
		Scale as shown on A3	Date 02/12/2021
		Job No. J21403-R4A	Dwg. No. D5 of 5

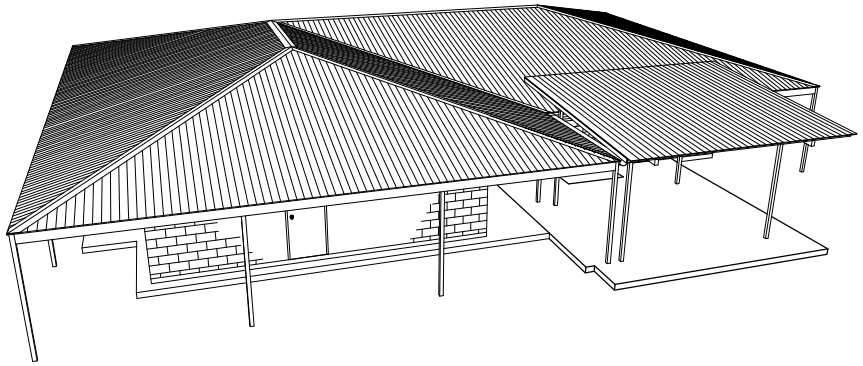

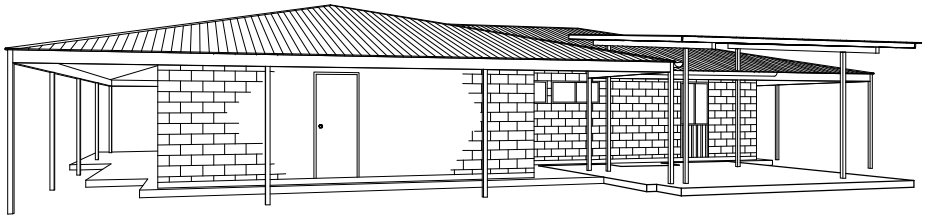

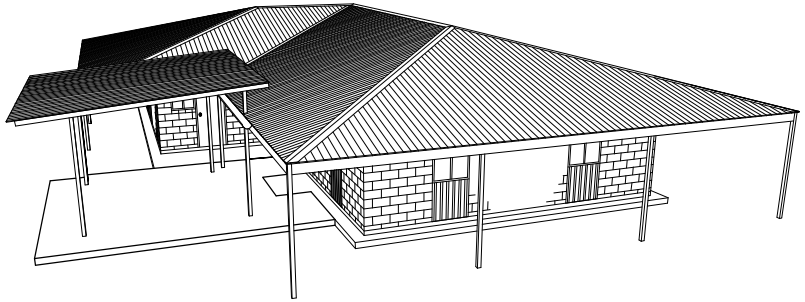

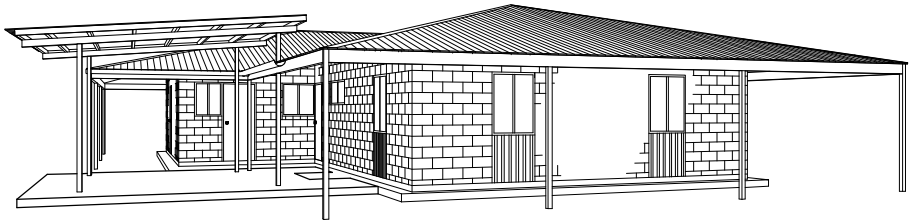

Wilkins Drafting Service Ph.0457889990	Project Title PROPOSED UNDERCOVER AREA RANGER HOUSE R3-D JABIRU HOUSING JABIRU, N.T.	Drawing Title PERSPECTIVE VIEWS	Client Gundjeihmi Aboriginal Corporation. Scale as shown on A3 / Date 02/12/2021 Job No. J21403-R3D / Dwg. No. DO of 5

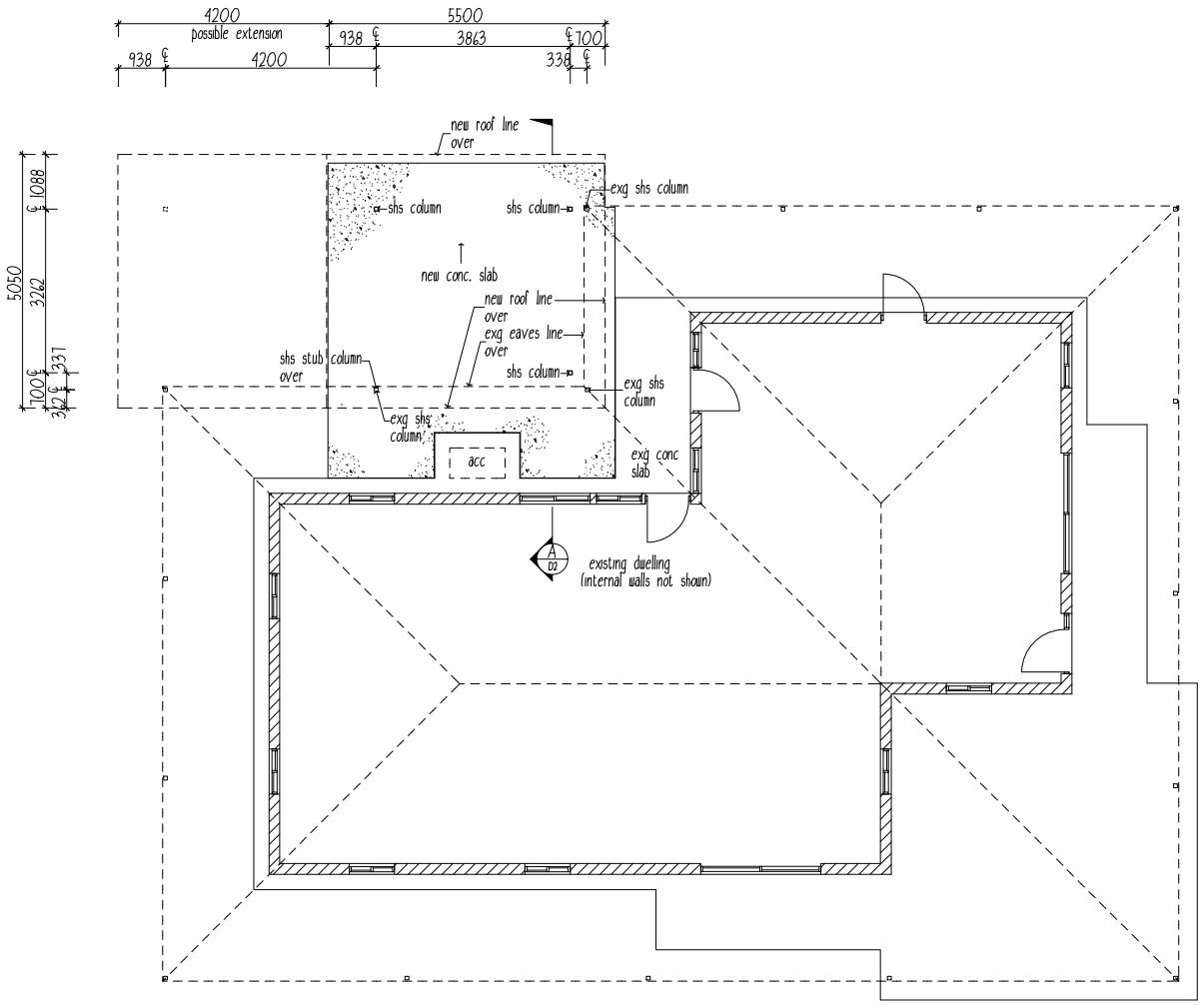

ELEVATION
refer Dwg. No. D2

LAYOUT PLAN
1 : 100

GENERAL NOTES

1. These drawings contain information required for obtaining a building permit, they are not detailed sufficiently for a specification for a building contract with a builder. An additional specification should be written to include painting, electrical & plumbing fittings & secondary fixings.
2. All work shall be in accordance with the Building Code of Australia & comply with the relevant current Standards Association of Australia codes and the local statutory authorities' regulations, except where varied by the contract documents.
3. All dimensions are in millimetres unless stated otherwise. All levels are expressed in metres. Verify all dimensions relevant to setting out and off-site work before construction and fabrication is commenced. Do not scale the drawings unless noted otherwise.
4. Read drawings in conjunction with all other consultants' drawings and specifications and with such other written instructions as may be issued during the course of the contract. Refer all discrepancies to the Superintendent for decision before proceeding with the work.
5. During construction maintain the structure in a stable condition and ensure no part is overstressed under construction activities.
6. Seek approval for all substitutions from the Superintendent before the work commences.
7. Keep the site in a clean & tidy condition throughout construction & at the completion of work remove all litter & debris to the satisfaction of the superintendent.

CERTIFIED AS STRUCTURALLY ADEQUATE

KFB Engineers Civil & Structural
1/38-42 Pease St, Cairns | PO Box 927, Cairns Q 4870
P: 07 40320492 | F: 07 40320092 | E: email@kfbeng.com.au

Date: 2/12/21 Signed:
Job No: K-9712
NT Reg. 33968ES

Wilkins Drafting Service
Ph.0457889990

Project Title: PROPOSED UNDERCOVER AREA RANGER HOUSE R3-D JABIRU HOUSING JABIRU, N.T.	Drawing Title: LAYOUT PLAN GENERAL NOTES	Client: Gundjeihmi Aboriginal Corporation.	
		Scale: as shown on A3	Date: 02/12/2021
		Job No.: J21403-R3D	Dwg. No.: D1 of 5

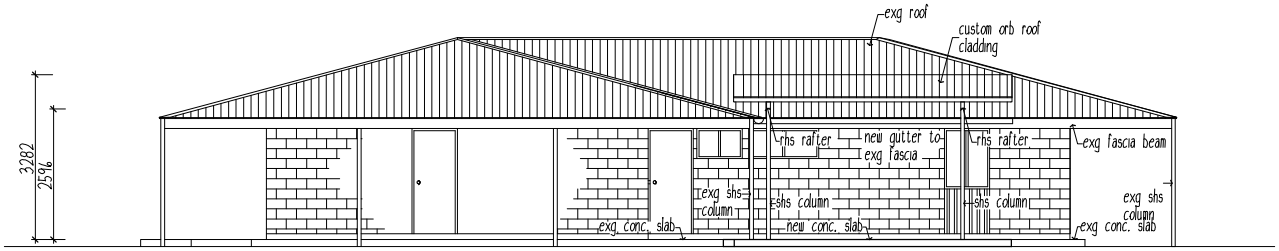

ELEVATION 1
1 : 100

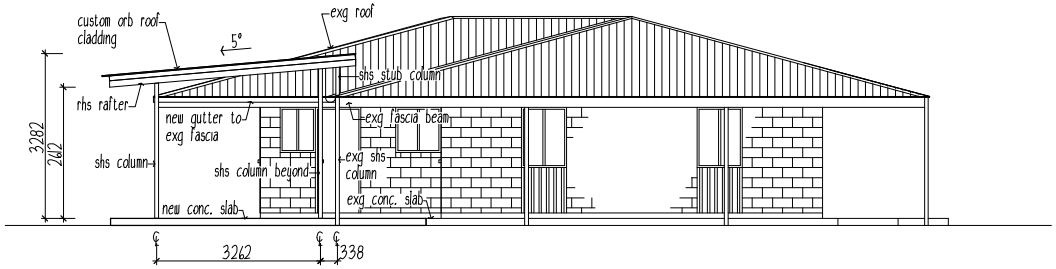

ELEVATION 2
1 : 100

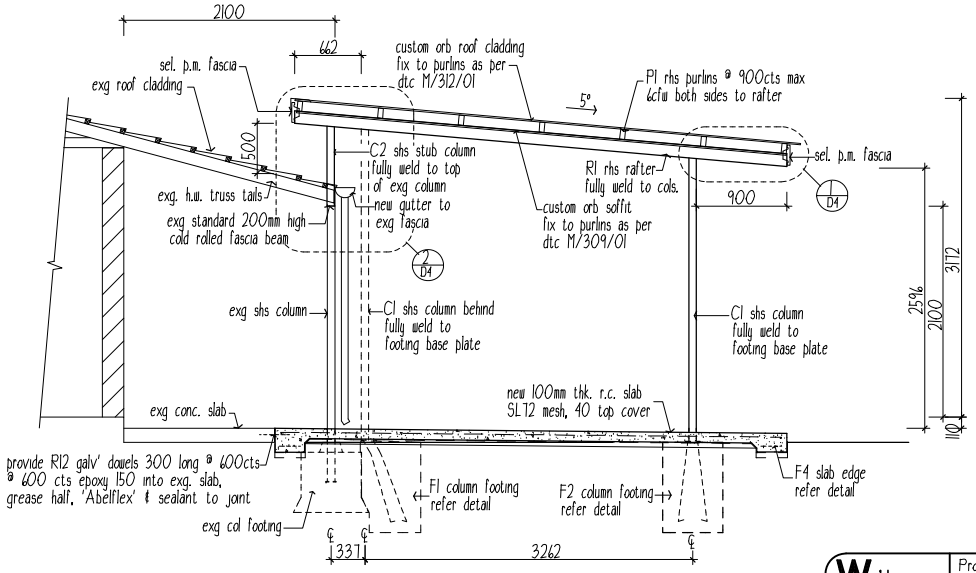

SECTION A
1 : 50

LEGEND :

F1 600 x 600 x 900deep conc. footing refer typical detail

F2 600dia. x 900deep conc. footing refer typical detail

F3 600dia. x 900deep conc. footing refer typical detail

F4 300wide x 200deep slab edge thickening refer typical detail

C1 75 x 4 SHS column

C2 75 x 4 SHS stub column

R1 125 x 75 x 4 RHS rafter

P1 100 x 50 x 3 RHS purlin

CERTIFIED AS STRUCTURALLY ADEQUATE

KFB Engineers Civil & Structural
1/38-42 Pease St, Cairns | PO Box 927, Cairns Q 4870
P: 07 40320492 | F: 07 40320092 | E: email@kfbeng.com.au

Date: 2/12/21 Signed:
Job No: K-9712
NT Reg. 33968ES

Wilkins Drafting Service
Ph.0457889990

Project Title
PROPOSED UNDERCOVER AREA
RANGER HOUSE R3-D
JABIRU HOUSING
JABIRU, N.T.

Drawing Title
ELEVATIONS
SECTION A

Client	Gundjeihmi Aboriginal Corporation.
Scale	as shown on A3
Date	02/12/2021
Job No.	J21403-R3D
Dwg. No.	D2 of 5

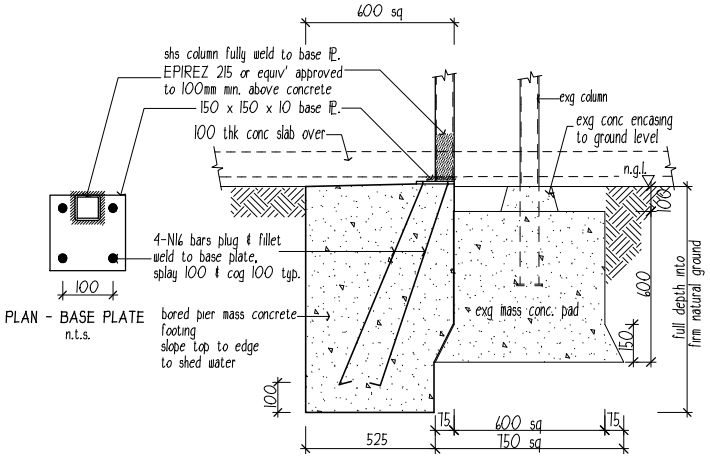

DETAIL XX - F1 - TYPICAL DETAIL
1 : 20

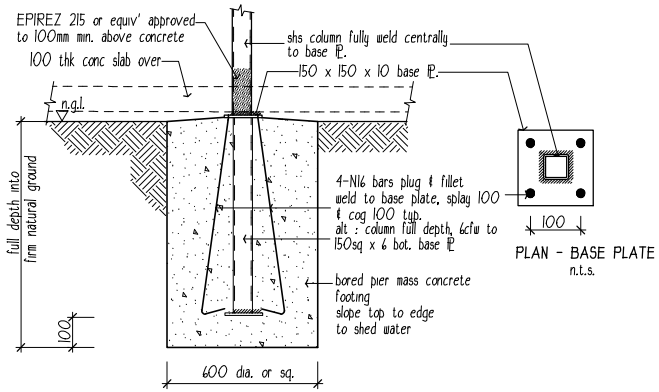

DETAIL YY - F2 - TYPICAL DETAIL
1 : 20

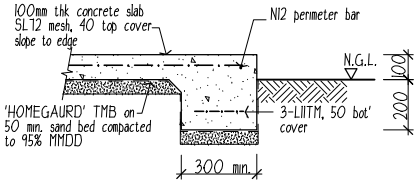

F4 - TYPICAL DETAIL
1 : 20

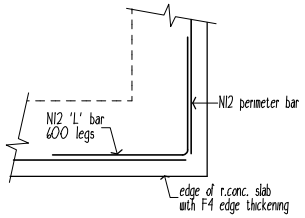

TYPICAL CORNER REINF' PLAN DETAIL
N.T.S.

LEGEND :

F1 600 x 600 x 900deep conc. footing
refer typical detail

F2 600dia. or square x 900deep conc. footing
refer typical detail

F3 600dia. x 900deep conc. footing
refer typical detail

F4 300wide x 200deep slab edge thickening
refer typical detail

C1 75 x 4 SHS column
provide R12 galv' dowels 300 long @ 600cts @ 600 cts epoxy 150 into exg. slab, grease half, 'Abelflex' & sealant to joint

2-N12 bars 1200 long tied under top mesh to re-entrant corners.

CERTIFIED AS STRUCTURALLY ADEQUATE

KFB Engineers — Civil & Structural
1/38-42 Pease St, Cairns | PO Box 927, Cairns Q 4870
P: 07 40320492 | F: 07 40320092 | E: email@kfbeng.com.au

Date: 2/12/21 Signed:
Job No: K-9712 NT Reg. 33968ES

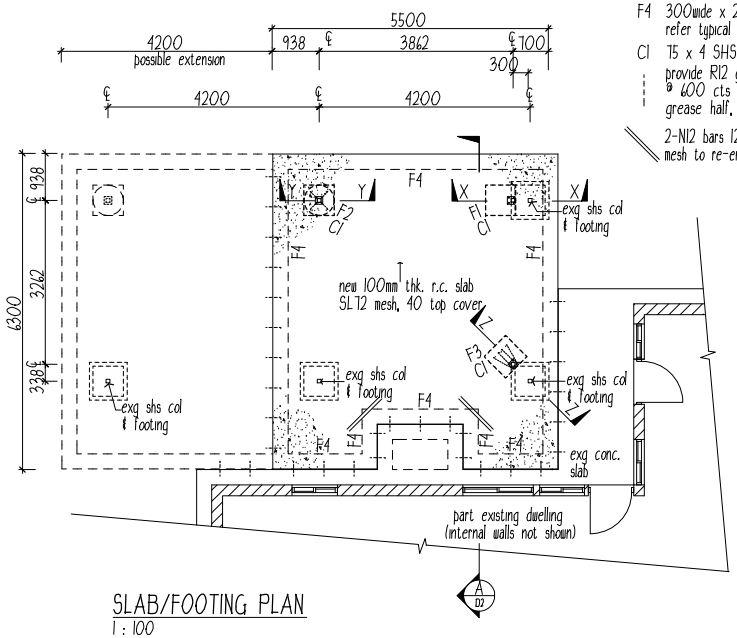

SLAB/FOOTING PLAN
1 : 100

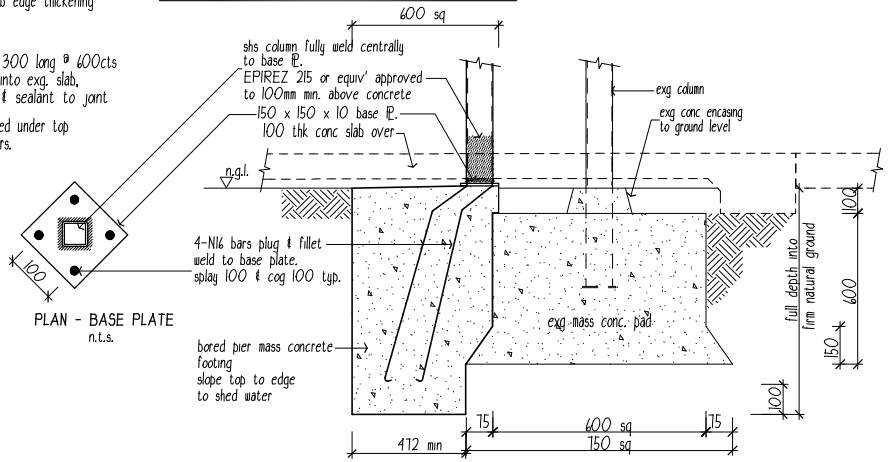

DETAIL ZZ - F3 - TYPICAL DETAIL
1 : 20

Wilkins Drafting Service Ph.0457889990	Project Title: PROPOSED UNDERCOVER AREA RANGER HOUSE R3-D JABIRU HOUSING JABIRU, N.T.	Drawing Title: SLAB/FOOTING PLAN TYPICAL FOOTING DETAILS	Client: Gundjeihmi Aboriginal Corporation.
			Scale: as shown on A3 — Date: 02/12/2021
			Job No.: J21403-R3D — Dwg. No.: D3 of 5

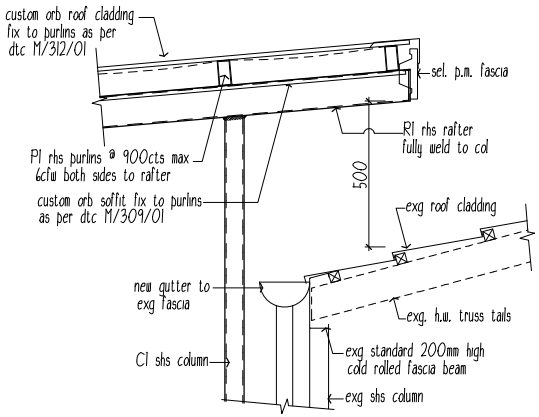

DETAIL 3
1 : 20

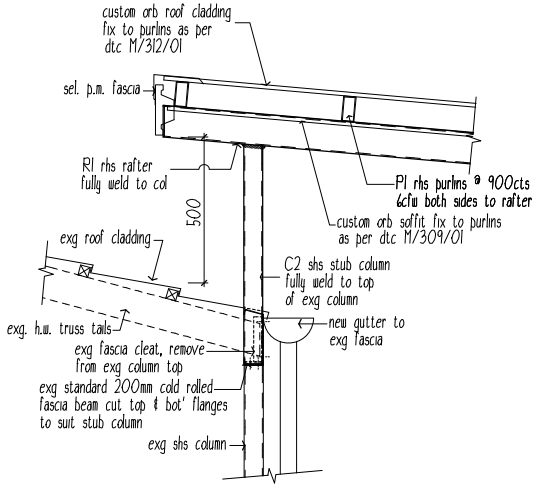

DETAIL 2
1 : 20
D2

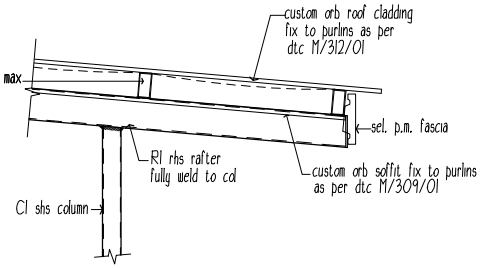

DETAIL 1
1 : 20
D2

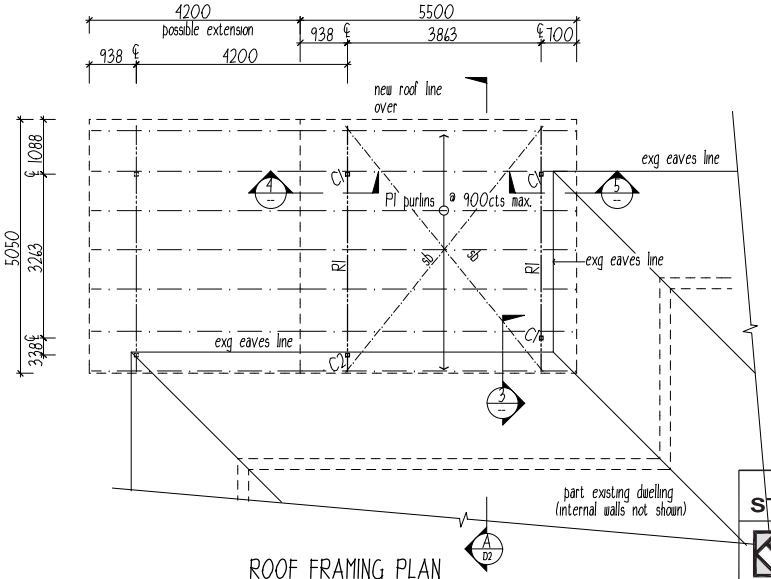

ROOF FRAMING PLAN
1 : 100

LEGEND :
C1 75 x 4 SHS column
C2 75 x 4 SHS stub column
R1 125 x 75 x 4 RHS rafter
P1 100 x 50 x 3 RHS purlin

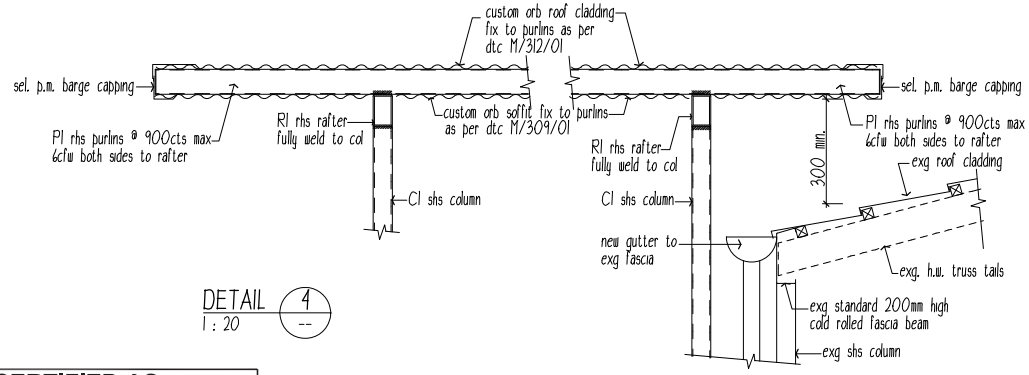

DETAIL 4
1 : 20

DETAIL 5
1 : 20

CERTIFIED AS STRUCTURALLY ADEQUATE

KFB Engineers Civil & Structural
1/38-42 Pease St, Cairns | PO Box 927, Cairns Q 4870
P: 07 40320492 | F: 07 40320092 | E: email@kfbeng.com.au

Date: 2/12/21 Signed:
Job No: K-9712 NT Reg. 33968ES

Wilkins Drafting Service Ph.0457889990	Project Title: PROPOSED UNDERCOVER AREA RANGER HOUSE R3-D JABIRU HOUSING JABIRU, N.T.	Drawing Title: ROOF FRAMING PLAN DETAILS 1 - 5	Client: Gundjeihmi Aboriginal Corporation.
			Scale: as shown on A3 / Date: 02/12/2021
			Job No.: J21403-R3D / Dwg. No.: D4 of 5

NOTES

GENERAL

1. All work shall be in accordance with the Building Code of Australia & comply with the relevant current Standards Association of Australia codes and the local statutory authorities' regulations, except where varied by the contract documents.
2. Verify all dimensions relevant to setting out and off-site work before construction and fabrication is commenced. Do not scale the drawings unless noted otherwise.
3. All dimensions are in millimetres unless stated otherwise. All levels are expressed in metres.
4. Read drawings in conjunction with all other consultants' drawings and specifications and with such other written instructions as may be issued during the course of the contract Refer all discrepancies to the Superintendent for decision before proceeding with the work.
5. During construction maintain the structure in a stable condition and ensure no part is overstressed under construction activities.
6. Seek approval for all substitutions from the Superintendent before the work commences.
7. Keep the site in a clean & tidy condition thoughout construction & at the completion of work remove all litter & debris to the satisfaction of the superintendent.

DESIGN CRITERIA

1. Dead & live loads - in accordance with AS1170.1 - 2011
2. The Design Wind Criteria is as follows :

Region	C
Design Wind Speed	V500 Vr = 69m/s
Terrain Category	2.5
Internal Pressure Coefficient	+0.7 / -0.65

External Pressure Coefficient in accordance with AS1170 - 2011

3. Foundation design bearing capacity = 100kPa (allowable).

Wind Classification C2 (AS4055)

Ultimate and Serviceability Limit State Design Wind Pressures

Wind Classification	Design gust wind speed (m/s)		Design pressures for windows (kPa)			
	Vh,u	Vh,s	Greater than 1.2m from corners		Up to 1.2m from corners	
	ULS	SLS	ULS	SLS	ULS	SLS
C1	50	32	±1.80	±0.55	-2.70	-0.83
C2	61	39	±2.68	±0.88	-4.02	-1.23
C3	74	47	±3.94	±1.19	-5.91	-1.79

EARTHWORKS

1. Earthworks construction shall comply with AS3798 & AS2870.
2. Excavation & service trenches shall comply with the following guidelines unless otherwise approved by the engineer

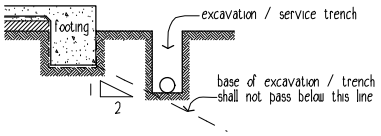

TERMITE MANAGEMENT SYSTEM

1. Termite Management System to be installed & certified by an approved applicator in accordance with AS 3660.1.
2. Provide Min. 300 wide x 50mm concrete mowing strip over perimeter reticulation system as to AS3660.1
3. A durable certificate is to be fixed in the meter box on completion.

FOOTINGS

1. Found all footings in original undisturbed ground having a safe bearing capacity of 150 kPa as noted on drawings. Before any concrete is placed, ensure the safe bearing capacity is verified.
2. Backfill sewers, stormwater drains and other in-ground services adjacent to buildings, if laid before footings are constructed, with approved fill placed in 200mm Max. layers and compacted to 95% MMDD.
   If laid after footings are constructed, avoid undermining of footings by either fully shoring trenches, or keeping excavation outside an influence line extended downwards at a slope of 1 in 2 from the the bottom corner of all footings. Backfill trenches as noted above.
3. Use selected fill (gravel, decomposed or broken rock) free from clay clumps and organic matter, conforming with the following grading requirements :

AS METRIC SIEVE	% PASSING BY WEIGHT	AS METRIC SIEVE	% PASSING BY WEIGHT
75.0 mm	100	2.36 mm	20 - 50
9.5 mm	30 - 100	0.075 mm	5 - 25

   Strip the area of the works of all top soil and deleterious material prior to placement of fill or compaction. Compact fill up to 150 mm below slab level in 150 mm layers to 95% MMDD.
4. Compact fill in the 150 mm layer immediately below slab level to 95% MMDD. Compact sand blinding layer below concrete slab by vibration plate or flooding to 95% MMDD.
5. Backfill over excavation with lean mix concrete.
6. Builder to confirm site classification "S" to AS2870

DRAINAGE

1. The contractor shall determine the exact location of existing services prior to any installation or commencement of work.

CONCRETE

1. All slabs & footings shall be constructed to comply with the requirements of AS2870 - 2011
2. Concrete slump shall be 80 ± 15mm. No admixtures to be used without approval from the engineer.
3. Concrete cover to be maintained by the use of approved chairs at nominal 800cts. Conduits & pipes shall not be placed within concrete cover.
4. Mesh reinforcement laps shall be at least one full wire spacing plus 25mm. Reinforcement shall be in accordance with AS4671.
5. Continuously cure slabs for a minimum of 7 days after casting by ponding, covering with a waterproof membrane or other approved means.

STEEL

1. All structural steelwork shall comply with AS 4100 - SAA Steel Struct. Code & associated Australian Standards.
2. Ensure welding is performed by an experienced operator in accordance with AS 1554.
3. Use hot dipped galvanised commerial bolts (Grade 4.6/S) to AS1111 and AS 1112, tightened to a snug tight fit unless otherwise shown. Where bolts are designated grade 8.8/S, use high strength bolts to AS 1252, tightened to a snug tigh fit.
   Where bolts are designated 8.8/TF or grade 8.8/TB use high strength steel bolts (grade 8.8/S) to AS 1252, fully tensioned in accordance with AS 1511.
4. During construction provide and leave in place, untill permanent bracing elements are constructed, such temporary bracing as is necessary to stabilise the structure during erection.
5. Seal the ends of all tubular members with nominal thickness plates and continuous fillet welds unless otherwise shown.
6. Except where otherwise shown fully weld connections with 6mm continuous fillet general purpose (G.P.) welds for the full contact area. Special purpoes welds are designated (S.P.)
7. Unless otherwise specified, paint all external steelwork with one shop coat of Inorganic Zinc Silicate primer after blast cleaning to a class 2.5 finish. Touch up damaged areas with cold galv after power cleaning. members encased in concrete, fire sprayed or HSTF bolted connections must not be painted
8. Unless otherwise specified paint all internal steelwork with one shop coat of Red Oxide Zinc Phoshate primer after blast cleaning to a class 2 finish. Touch up damaged areas as required after power cleaning. Alternatively for RHS, use 'Duragal' and touch up with Dimet Zeden or equal and paint for long term protection to manufacturers recommendations.
9. Unless otherwise specified paint steelwork below finished surface level and not concrete encased with high build epoxy.
10. Unless otherwise specified paint all steelwork one shop coat of Red Oxide Zinc Phosphate primer. Do not paint members encased in concrete, fire sprayed or friction grip bolted connections.
11. Protective coatings to all external steelwork to comply with BCA-96 Table 3.4.4.2.

TIMBER

1. Structural timber shall be minimum stress grade F17 (U.N.O.) to comply with AS1720

SITE DRAINAGE

1. Ground adjacent to building shall be graded away to fall at least 50mm over 1 metre width to satisfy BCA clause 3.1.2.3 surface water drainage.

CERTIFIED AS STRUCTURALLY ADEQUATE

KFB Engineers — Civil & Structural
1/38-42 Pease St, Cairns | PO Box 927, Cairns Q 4870
P: 07 40320492 | F: 07 40320092 | E: email@kfbeng.com.au

Date: 2/12/21 Signed: NT Reg. 33968ES
Job No: K-9712

Wilkins Drafting Service
Ph.0457889990

Project Title: PROPOSED UNDERCOVER AREA RANGER HOUSE R3-D JABIRU HOUSING JABIRU, N.T.	Drawing Title: STRUCTURAL NOTES	Client: Gundjeihmi Aboriginal Corporation.	
		Scale: as shown on A3	Date: 02/12/2021
		Job No.: J21403-R3D	Dwg. No.: D5 of 5

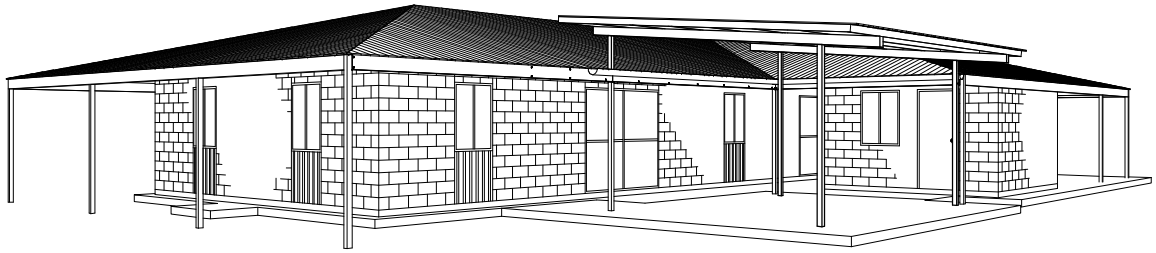

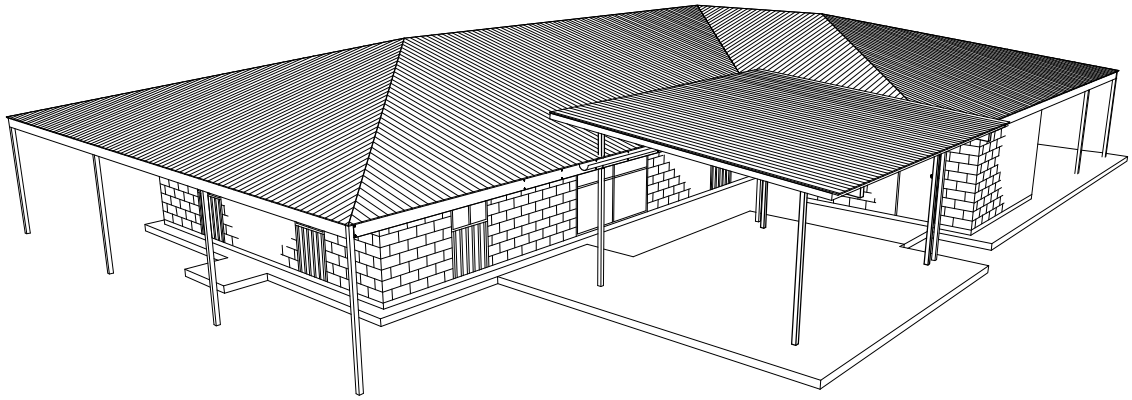

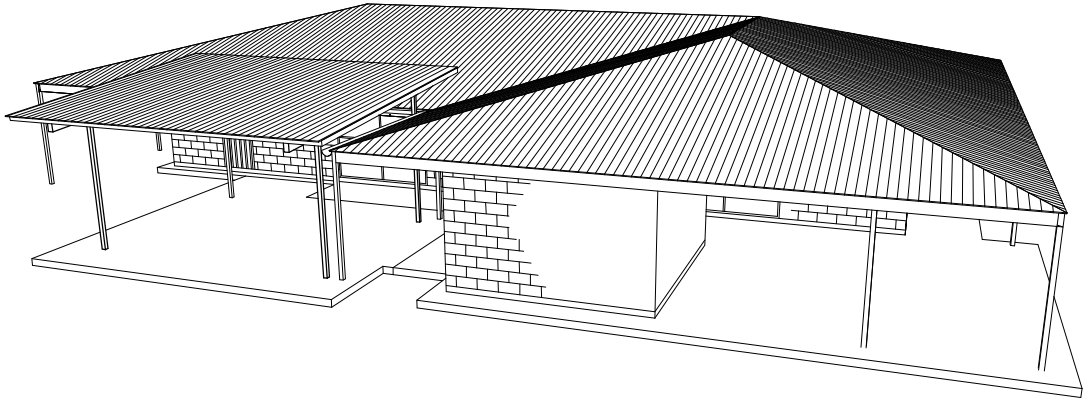

Wilkins Drafting Service Ph.0457889990	Project Title PROPOSED UNDERCOVER AREA RANGER HOUSE R4-A JABIRU HOUSING JABIRU, N.T.	Drawing Title PERSPECTIVE VIEWS	Client Gundjeihmi Aboriginal Corporation. Scale as shown on A3 / Date 02/12/2021 Job No. J21403-R4A / Dwg. No. D0 of 5

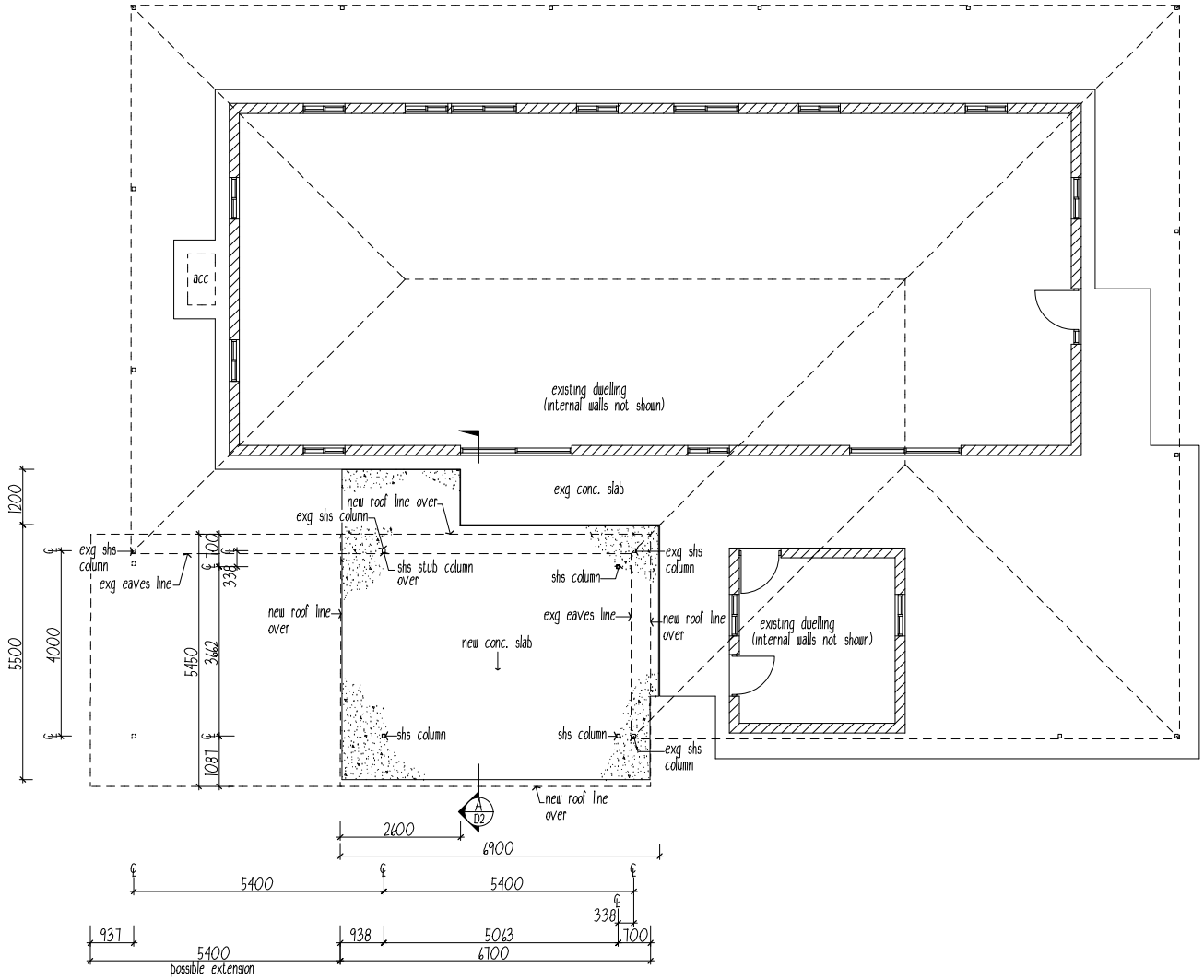

ELEVATION
refer Dwg. No. D2

LAYOUT PLAN
1 : 100

GENERAL NOTES

1 These drawings contain information required for obtaining a building permit, they are not detailed sufficiently for a specification for a building contract with a builder. An additional specification should be written to include painting, electrical & plumbing fittings & secondary fixings.

1. All work shall be in accordance with the Building Code of Australia & comply with the relevant current Standards Association of Australia codes and the local statutory authorities' regulations, except where varied by the contract documents.
2. All dimensions are in millimetres unless stated otherwise. All levels are expressed in metres. Verify all dimensions relevant to setting out and off-site work before construction and fabrication is commenced. Do not scale the drawings unless noted otherwise.
3. Read drawings in conjunction with all other consultants' drawings and specifications and with such other written instructions as may be issued during the course of the contract Refer all discrepancies to the Superintendent for decision before proceeding with the work.
4. During construction maintain the structure in a stable condition and ensure no part is overstressed under construction activities.
5. Seek approval for all substitutions from the Superintendent before the work commences.
6. Keep the site in a clean & tidy condition thoughout construction & at the completion of work remove all litter & debris to the satisfaction of the superintendent.

CERTIFIED AS STRUCTURALLY ADEQUATE

KFB Engineers Civil & Structural
1/38-42 Pease St, Cairns | PO Box 927, Cairns Q 4870
P: 07 40320492 | F: 07 40320092 | E: email@kfbeng.com.au

Date: 2/12/21 Signed:
Job No: K-9712 NT Reg. 33968ES

Wilkins Drafting Service Ph.0457889990	Project Title: PROPOSED UNDERCOVER AREA RANGER HOUSE R4-A JABIRU HOUSING JABIRU, N.T.	Drawing Title: LAYOUT PLAN GENERAL NOTES	Client: Gundjeihmi Aboriginal Corporation.
			Scale: as shown on A3 / Date: 02/12/2021
			Job No.: J21403-R4A / Dwg. No.: D1 of 5

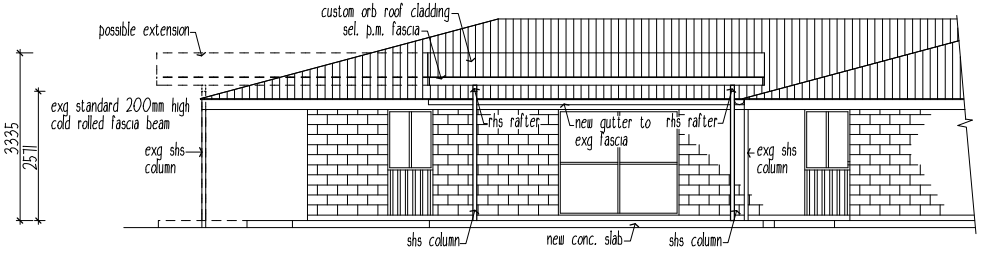

ELEVATION 1
1 : 100

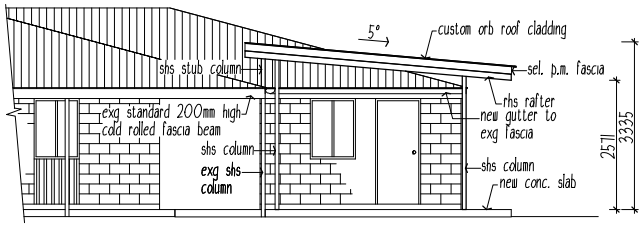

ELEVATION 2
1 : 100

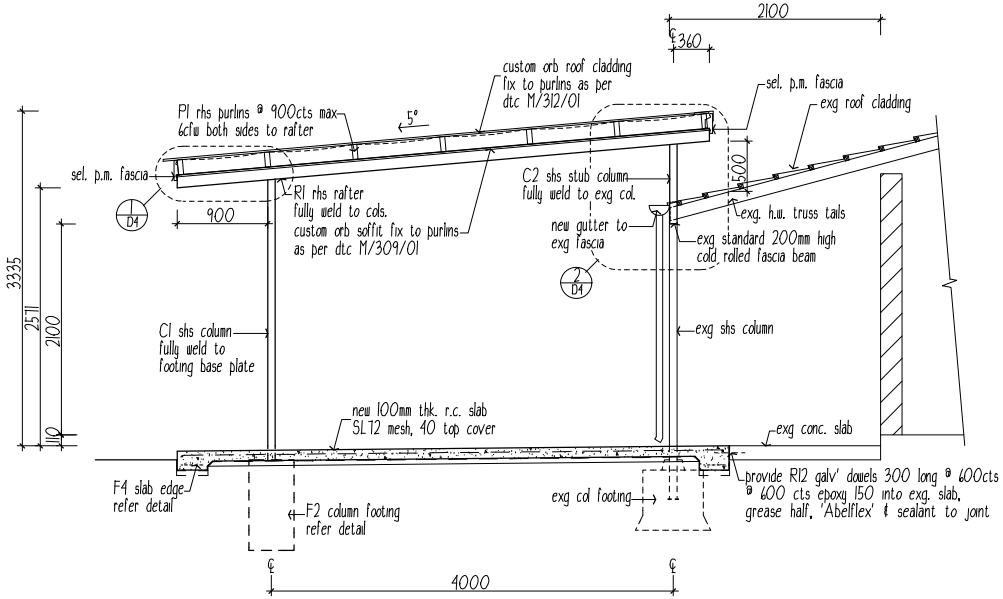

SECTION A
1 : 50

LEGEND :

F2 600dia. x 900deep conc. footing
refer typical detail

F4 300wide x 200deep slab edge thickening
refer typical detail

C1 75 x 4 SHS column

C2 75 x 4 SHS stub column

R1 125 x 75 x 4 RHS rafter

P1 150 x 50 x 3 RHS purlin

CERTIFIED AS STRUCTURALLY ADEQUATE

KFB Engineers Civil & Structural

1/38-42 Pease St, Cairns | PO Box 927, Cairns Q 4870
P: 07 40320492 | F: 07 40320092 | E: email@kfbeng.com.au

Date: 2/12/21 Signed:
Job No: K-9712 NT Reg. 33968ES

Wilkins Drafting Service
Ph.0457889990

Project Title
PROPOSED UNDERCOVER AREA
RANGER HOUSE R4-A
JABIRU HOUSING
JABIRU, N.T.

Drawing Title
ELEVATIONS
SECTION A

Client: Gundjeihmi Aboriginal Corporation.
Scale: as shown on A3
Date: 02/12/2021
Job No.: J21403-R4A
Dwg. No.: D2 of 5

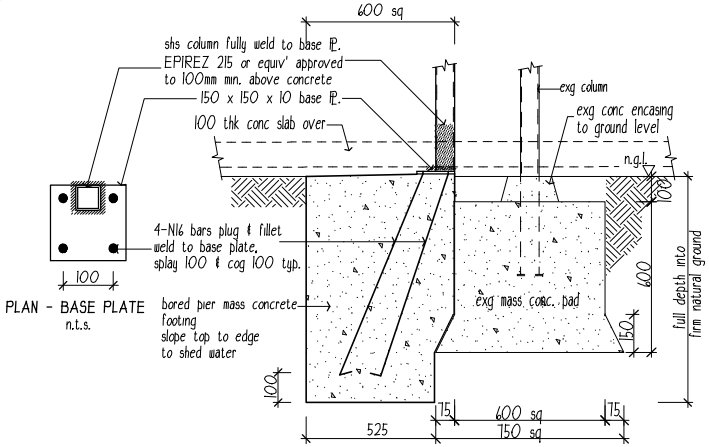

DETAIL XX - F1 - TYPICAL DETAIL
1 : 20

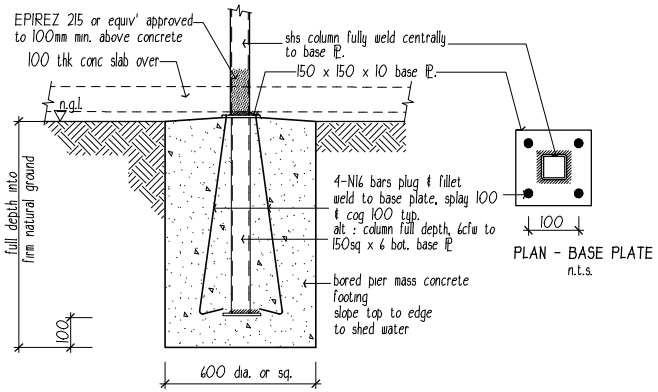

DETAIL YY - F2 - TYPICAL DETAIL
1 : 20

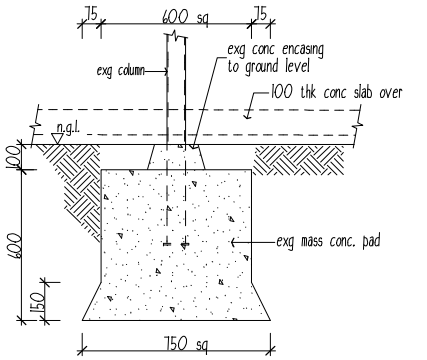

DETAIL WW - TYPICAL EXISTING FOOTING
1 : 20

CERTIFIED AS STRUCTURALLY ADEQUATE

KFB Engineers — Civil & Structural
1/38-42 Pease St, Cairns | PO Box 927, Cairns Q 4870
P: 07 40320492 | F: 07 40320092 | E: email@kfbeng.com.au

Date: 2/12/21 Signed:
Job No: K-9712 NT Reg. 33968ES

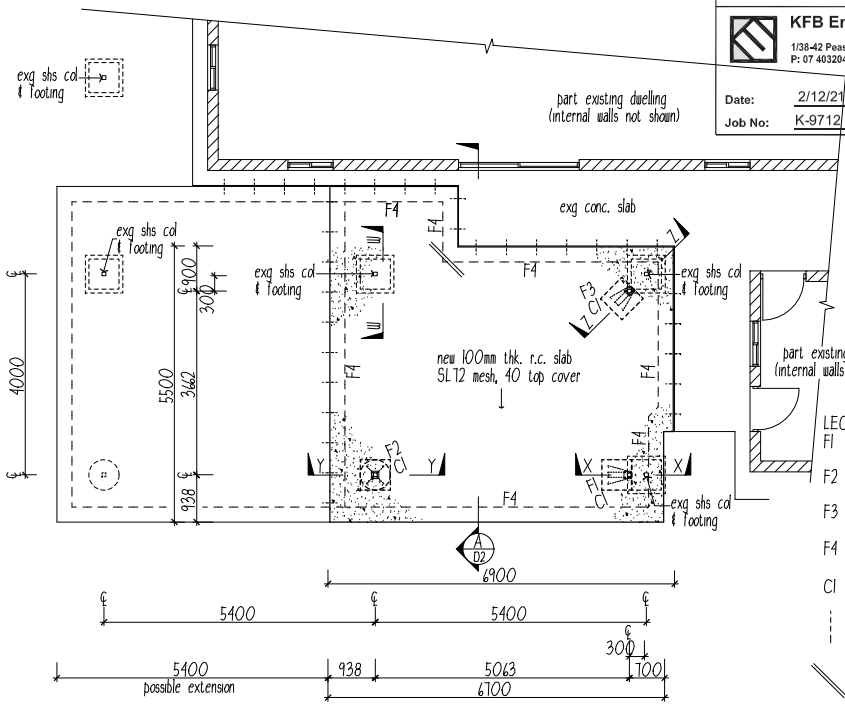

SLAB/FOOTING PLAN
1 : 100

LEGEND :

F1 600sq. x 900deep conc. footing refer typical detail
F2 600dia. or square x 900deep conc. footing refer typical detail
F3 600sq. x 900deep conc. footing refer typical detail
F4 300wide x 200deep slab edge thickening refer typical detail
C1 75 x 4 SHS column
provide R12 galv' dowels 300 long @ 600cts @ 600 cts epoxy 150 into exg. slab, grease half, 'Abelflex' & sealant to joint
2-N12 bars 1200 long tied under top mesh to re-entrant corners.

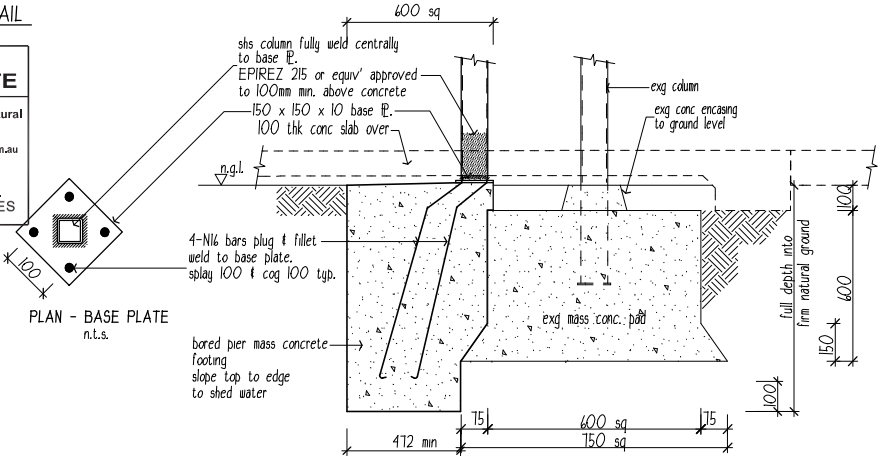

DETAIL ZZ - F3 - TYPICAL DETAIL
1 : 20

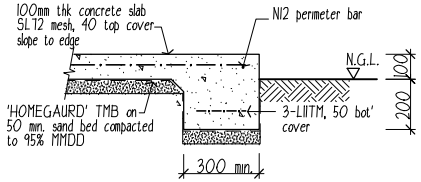

F4 - TYPICAL DETAIL
1 : 20

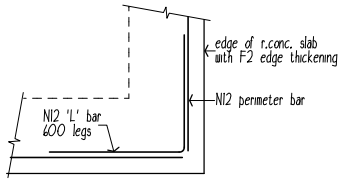

TYPICAL CORNER REINF' PLAN DETAIL
N.T.S.

Wilkins Drafting Service Ph.0457889990	Project Title: PROPOSED UNDERCOVER AREA RANGER HOUSE R4-A OPTION 2 JABIRU HOUSING JABIRU, N.T.	Drawing Title: SLAB/FOOTING PLAN TYPICAL FOOTING DETAILS	Client: Gundjeihmi Aboriginal Corporation.
			Scale: as shown on A3 — Date: 02/12/2021
			Job No.: J21403-R4A2 — Dwg. No.: D3 of 5

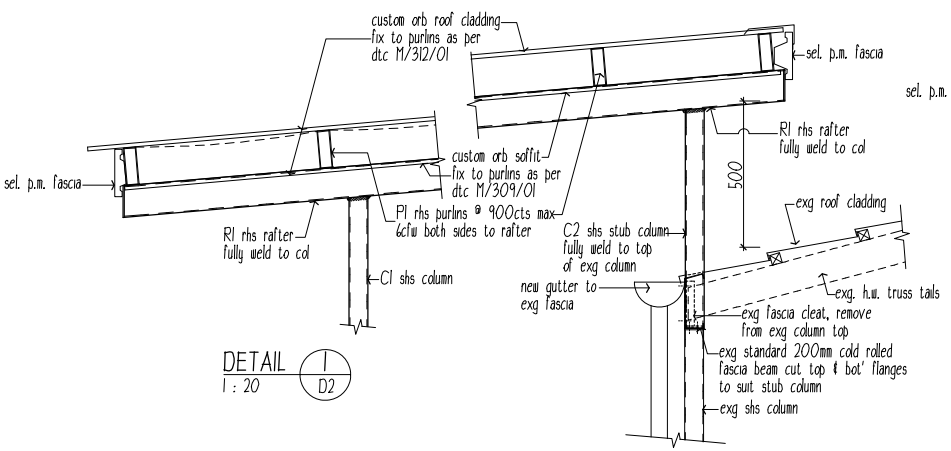

DETAIL 1 / D2
1 : 20

DETAIL 2 / D2
1 : 20

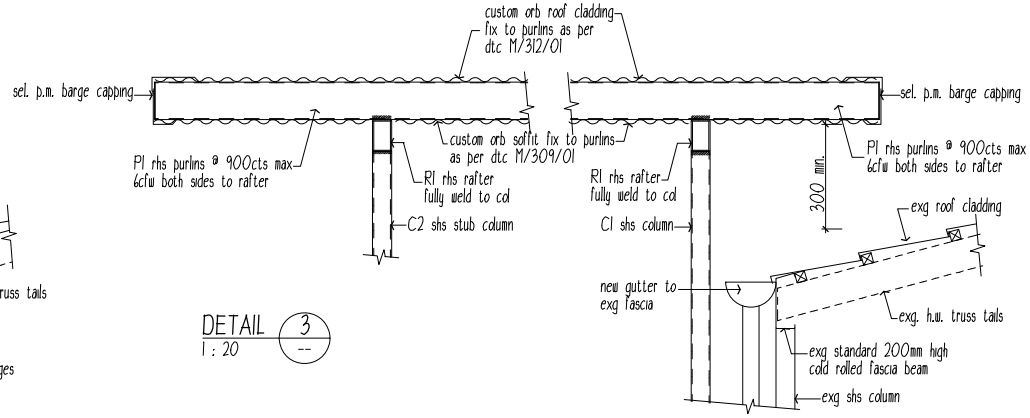

DETAIL 3 / --
1 : 20

DETAIL 4 / --
1 : 20

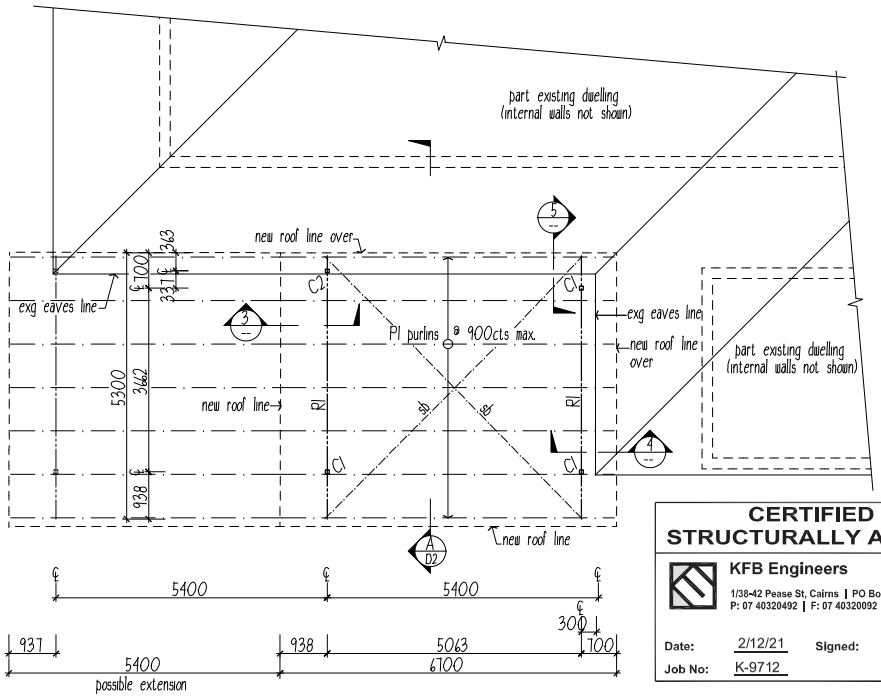

ROOF FRAMING PLAN
1 : 100

LEGEND :
C1 75 x 4 SHS column
C2 75 x 4 SHS stub column
R1 125 x 75 x 4 RHS rafter
P1 150 x 50 x 3 RHS purlin

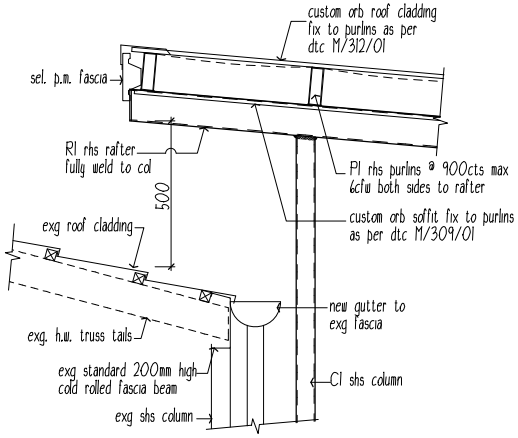

DETAIL 5 / --
1 : 20

CERTIFIED AS STRUCTURALLY ADEQUATE

KFB Engineers — Civil & Structural
1/38-42 Pease St, Cairns | PO Box 927, Cairns Q 4870
P: 07 40320492 | F: 07 40320092 | E: email@kfbeng.com.au

Date: 2/12/21 Signed:
Job No: K-9712
NT Reg. 33968ES

Wilkins Drafting Service Ph.0457889990	Project Title: PROPOSED UNDERCOVER AREA RANGER HOUSE R4-A JABIRU HOUSING JABIRU, N.T.	Drawing Title: ROOF FRAMING PLAN DETAILS 1 - 5	Client: Gundjeihmi Aboriginal Corporation.
			Scale: as shown on A3 — Date: 02/12/2021
			Job No.: J21403-R4A — Dwg. No.: D4 of 5

NOTES

GENERAL

1. All work shall be in accordance with the Building Code of Australia & comply with the relevant current Standards Association of Australia codes and the local statutory authorities' regulations, except where varied by the contract documents.
2. Verify all dimensions relevant to setting out and off-site work before construction and fabrication is commenced. Do not scale the drawings unless noted otherwise.
3. All dimensions are in millimetres unless stated otherwise. All levels are expressed in metres.
4. Read drawings in conjunction with all other consultants' drawings and specifications and with such other written instructions as may be issued during the course of the contract Refer all discrepancies to the Superintendent for decision before proceeding with the work.
5. During construction maintain the structure in a stable condition and ensure no part is overstressed under construction activities.
6. Seek approval for all substitutions from the Superintendent before the work commences.
7. Keep the site in a clean & tidy condition thoughout construction & at the completion of work remove all litter & debris to the satisfaction of the superintendent.

DESIGN CRITERIA

1. Dead & live loads - in accordance with AS1170.1 - 2011
2. The Design Wind Criteria is as follows :

Region	C
Design Wind Speed	V500 Vr = 69m/s
Terrain Category	2.5
Internal Pressure Coefficient	+0.7 / -0.65

External Pressure Coefficient in accordance with AS1170 - 2011

3. Foundation design bearing capacity = 100kPa (allowable).

Wind Classification C2 (AS4055)

Ultimate and Serviceability Limit State Design Wind Pressures

Wind Classification	Design gust wind speed (m/s)		Design pressures for windows (kPa)			
	Vh,u	Vh,s	Greater than 1.2m from corners		Up to 1.2m from corners	
	ULS	SLS	ULS	SLS	ULS	SLS
C1	50	32	±1.80	±0.55	-2.70	-0.83
C2	61	39	±2.68	±0.88	-4.02	-1.23
C3	74	47	±3.94	±1.19	-5.91	-1.79

EARTHWORKS

1. Earthworks construction shall comply with AS3798 & AS2870.
2. Excavation & service trenches shall comply with the following guidelines unless otherwise approved by the engineer

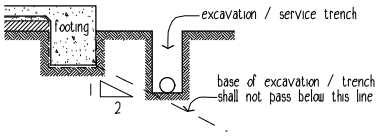

TERMITE MANAGEMENT SYSTEM

1. Termite Management System to be installed & certified by an approved applicator in accordance with AS 3660.1.
2. Provide Min. 300 wide x 50mm concrete mowing strip over perimeter reticulation system as to AS3660.1
3. A durable certificate is to be fixed in the meter box on completion.

FOOTINGS

1. Found all footings in original undisturbed ground having a safe bearing capacity of 150 kPa as noted on drawings. Before any concrete is placed, ensure the safe bearing capacity is verified.
2. Backfill sewers, stormwater drains and other in-ground services adjacent to buildings, if laid before footings are constructed, with approved fill placed in 200mm Max. layers and compacted to 95% MMDD.
   If laid after footings are constructed, avoid undermining of footings by either fully shoring trenches, or keeping excavation outside an influence line extended downwards at a slope of 1 in 2 from the the bottom corner of all footings. Backfill trenches as noted above.
3. Use selected fill (gravel, decomposed or broken rock) free from clay clumps and organic matter, conforming with the following grading requirements :

AS METRIC SIEVE	% PASSING BY WEIGHT	AS METRIC SIEVE	% PASSING BY WEIGHT
75.0 mm	100	2.36 mm	20 - 50
9.5 mm	30 - 100	0.075 mm	5 - 25

   Strip the area of the works of all top soil and deleterious material prior to placement of fill or compaction. Compact fill up to 150 mm below slab level in 150 mm layers to 95% MMDD.
4. Compact fill in the 150 mm layer immediately below slab level to 95% MMDD. Compact sand blinding layer below concrete slab by vibration plate or flooding to 95% MMDD.
5. Backfill over excavation with lean mix concrete.
6. Builder to confirm site classification "S" to AS2870

DRAINAGE

1. The contractor shall determine the exact location of existing services prior to any installation or commencement of work.

CONCRETE

1. All slabs & footings shall be constructed to comply with the requirements of AS2870 - 2011
2. Concrete slump shall be 80 ± 15mm. No admixtures to be used without approval from the engineer.
3. Concrete cover to be maintained by the use of approved chairs at nominal 800cts. Conduits & pipes shall not be placed within concrete cover.
4. Mesh reinforcement laps shall be at least one full wire spacing plus 25mm. Reinforcement shall be in accordance with AS4671.
5. Continuously cure slabs for a minimum of 7 days after casting by ponding, covering with a waterproof membrane or other approved means.

STEEL

1. All structural steelwork shall comply with AS 4100 - SAA Steel Struct. Code & associated Australian Standards.
2. Ensure welding is performed by an experienced operator in accordance with AS 1554.
3. Use hot dipped galvanised commerial bolts (Grade 4.6/S) to AS1111 and AS 1112, tightened to a snug tight fit unless otherwise shown. Where bolts are designated grade 8.8/S, use high strength bolts to AS 1252, tightened to a snug tigh fit.
   Where bolts are designated 8.8/TF or grade 8.8/TB use high strength steel bolts (grade 8.8/S) to AS 1252, fully tensioned in accordance with AS 1511.
4. During construction provide and leave in place, untill permanent bracing elements are constructed, such temporary bracing as is necessary to stabilise the structure during erection.
5. Seal the ends of all tubular members with nominal thickness plates and continuous fillet welds unless otherwise shown.
6. Except where otherwise shown fully weld connections with 6mm continuous fillet general purpose (G.P.) welds for the full contact area. Special purpoes welds are designated (S.P.)
7. Unless otherwise specified, paint all external steelwork with one shop coat of Inorganic Zinc Silicate primer after blast cleaning to a class 2.5 finish. Touch up damaged areas with cold galv after power cleaning. members encased in concrete, fire sprayed or HSTF bolted connections must not be painted
8. Unless otherwise specified paint all internal steelwork with one shop coat of Red Oxide Zinc Phoshate primer after blast cleaning to a class 2 finish. Touch up damaged areas as required after power cleaning. Alternatively for RHS, use 'Duragal' and touch up with Dimet Zeden or equal and paint for long term protection to manufacturers recommendations.
9. Unless otherwise specified paint steelwork below finished surface level and not concrete encased with high build epoxy.
10. Unless otherwise specified paint all steelwork one shop coat of Red Oxide Zinc Phosphate primer. Do not paint members encased in concrete, fire sprayed or friction grip bolted connections.
11. Protective coatings to all external steelwork to comply with BCA-96 Table 3.4.4.2.

TIMBER

1. Structural timber shall be minimum stress grade F17 (U.N.O.) to comply with AS1720

SITE DRAINAGE

1. Ground adjacent to building shall be graded away to fall at least 50mm over 1 metre width to satisfy BCA clause 3.1.2.3 surface water drainage.

CERTIFIED AS STRUCTURALLY ADEQUATE

KFB Engineers — Civil & Structural
1/38-42 Pease St, Cairns | PO Box 927, Cairns Q 4870
P: 07 40320492 | F: 07 40320092 | E: email@kfbeng.com.au

Date: 2/12/21 Signed: NT Reg. 33968ES
Job No: K-9712

Wilkins Drafting Service
Ph.0457889990

Project Title: PROPOSED UNDERCOVER AREA RANGER HOUSE R4-A JABIRU HOUSING JABIRU, N.T.	Drawing Title: STRUCTURAL NOTES	Client: Gundjeihmi Aboriginal Corporation.	
		Scale: as shown on A3	Date: 02/12/2021
		Job No.: J21403-R4A	Dwg. No.: D5 of 5

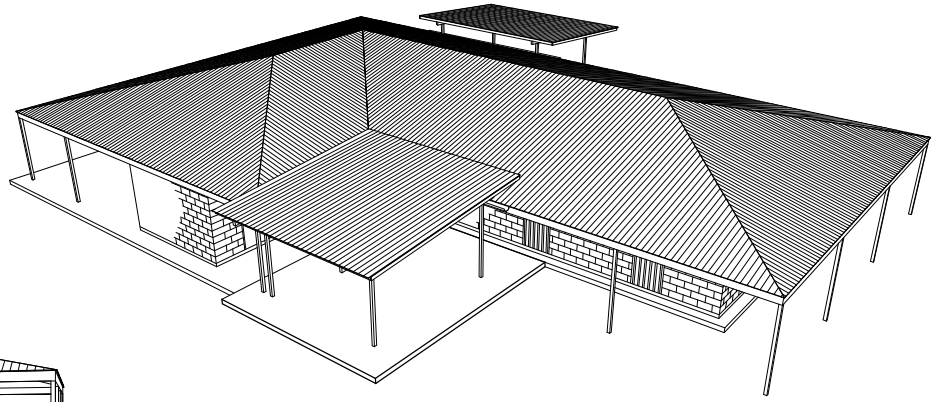

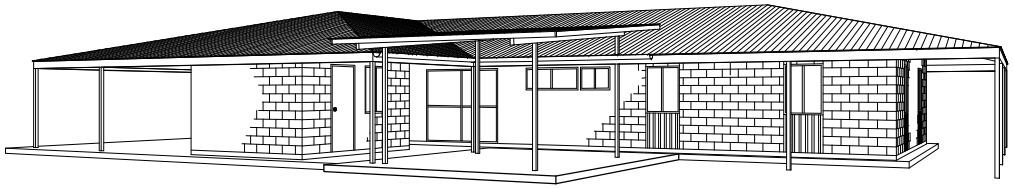

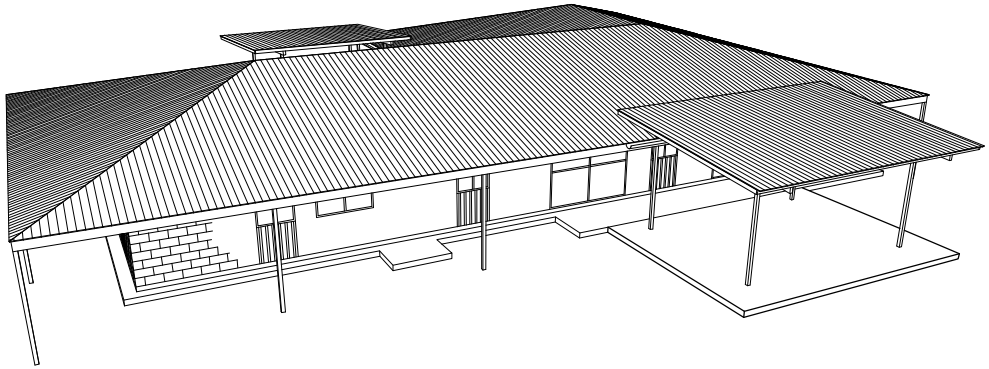

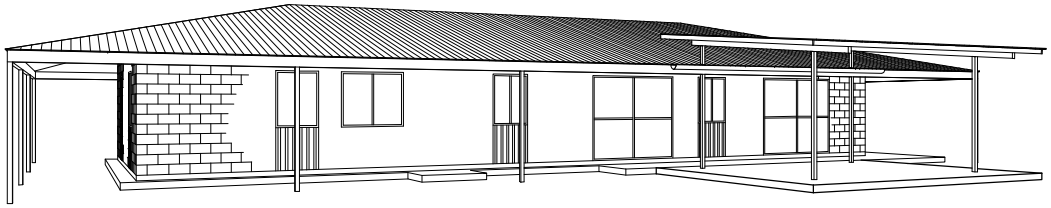

Wilkins Drafting Service Ph.0457889990	Project Title PROPOSED UNDERCOVER AREA RANGER HOUSE R4-B JABIRU HOUSING JABIRU, N.T.	Drawing Title PERSPECTIVE VIEWS	Client Gundjeihmi Aboriginal Corporation. Scale as shown on A3 / Date 02/12/2021 Job No. J21403-R4B / Dwg. No. D0 of 1

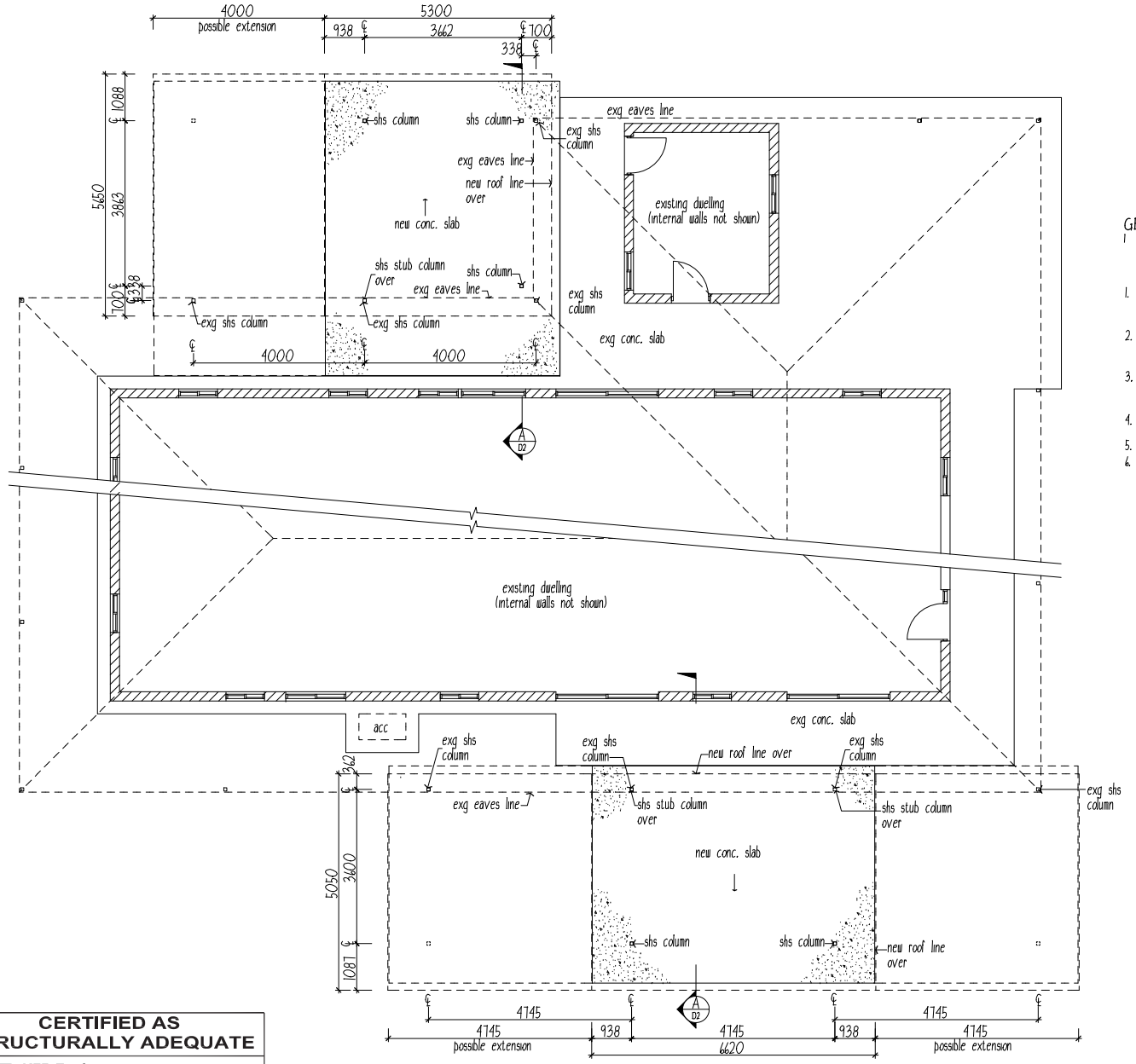

ELEVATION refer Dwg. No. D2 (1/D2, 2/D2)

LAYOUT PLAN
1 : 100

GENERAL NOTES

1 These drawings contain information required for obtaining abuilding permit, they are not detailed sufficiently for a specification for a building contract with a builder. An additional specification should be written to include painting, electrical & plumbing fittings & secondary fixings.

1. All work shall be in accordance with the Building Code of Australia & comply with the relevant current Standards Association of Australia codes and the local statutory authorities' regulations, except where varied by the contract documents.
2. All dimensions are in millimetres unless stated otherwise. All levels are expressed in metres. Verify all dimensions relevant to setting out and off-site work before construction and fabrication is commenced. Do not scale the drawings unless noted otherwise.
3. Read drawings in conjunction with all other consultants' drawings and specifications and with such other written instructions as may be issued during the course of the contract Refer all discrepancies to the Superintendent for decision before proceeding with the work.
4. During construction maintain the structure in a stable condition and ensure no part is overstressed under construction activities.
5. Seek approval for all substitutions from the Superintendent before the work commences.
6. Keep the site in a clean & tidy condition thoughout construction & at the completion of work remove all litter & debris to the satisfaction of the superintendent.

CERTIFIED AS STRUCTURALLY ADEQUATE

KFB Engineers — Civil & Structural
1/38-42 Pease St, Cairns | PO Box 927, Cairns Q 4870
P: 07 40320492 | F: 07 40320092 | E: email@kfbeng.com.au

Date: 2/12/21 Signed:
Job No: K-9712 NT Reg. 33968ES

Wilkins Drafting Service
Ph.0457889990

Project Title	PROPOSED UNDERCOVER AREA RANGER HOUSE R4-B JABIRU HOUSING JABIRU, N.T.
Drawing Title	LAYOUT PLAN GENERAL NOTES
Client	Gundjeihmi Aboriginal Corporation.
Scale	as shown on A3
Date	02/12/2021
Job No.	J21403-R4B
Dwg. No.	D1 of 1

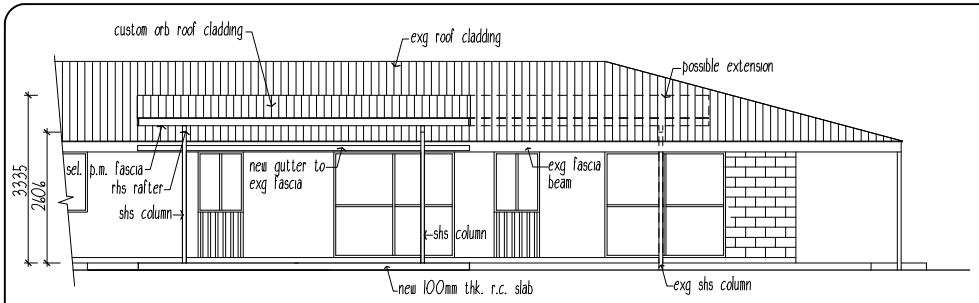

ELEVATION 1
1 : 100

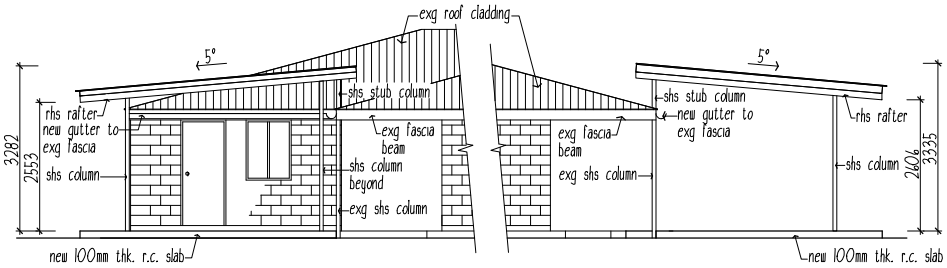

ELEVATION 2
1 : 100

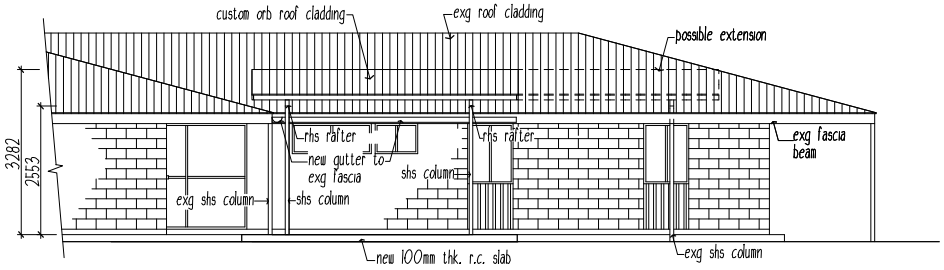

ELEVATION 3
1 : 100

CERTIFIED AS STRUCTURALLY ADEQUATE

KFB Engineers Civil & Structural
1/38-42 Pease St, Cairns | PO Box 927, Cairns Q 4870
P: 07 40320492 | F: 07 40320092 | E: email@kfbeng.com.au

Date: 2/12/21 Signed:
Job No: K-9712 NT Reg. 33968ES

LEGEND :

- F1 600 x 600 x 900deep conc. footing refer typical detail
- F2 600dia. or square x 900deep conc. footing refer typical detail
- F4 300wide x 200deep slab edge thickening refer typical detail
- C1 75 x 4 SHS column
- C2 75 x 4 SHS stub column
- R1 125 x 75 x 4 RHS rafter
- P1 100 x 50 x 2 RHS purlin
- P2 150 x 50 x 2 RHS purlin

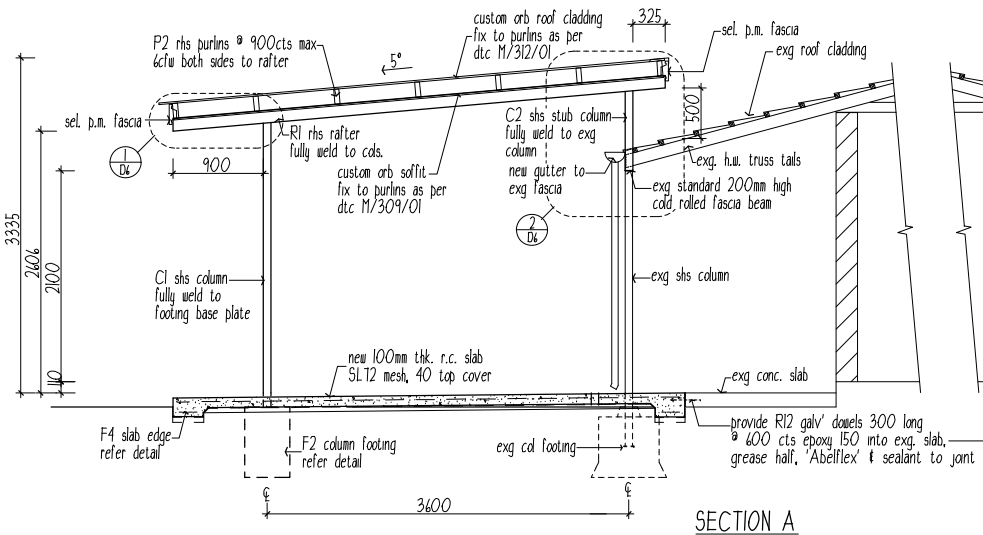

SECTION A
1 : 50

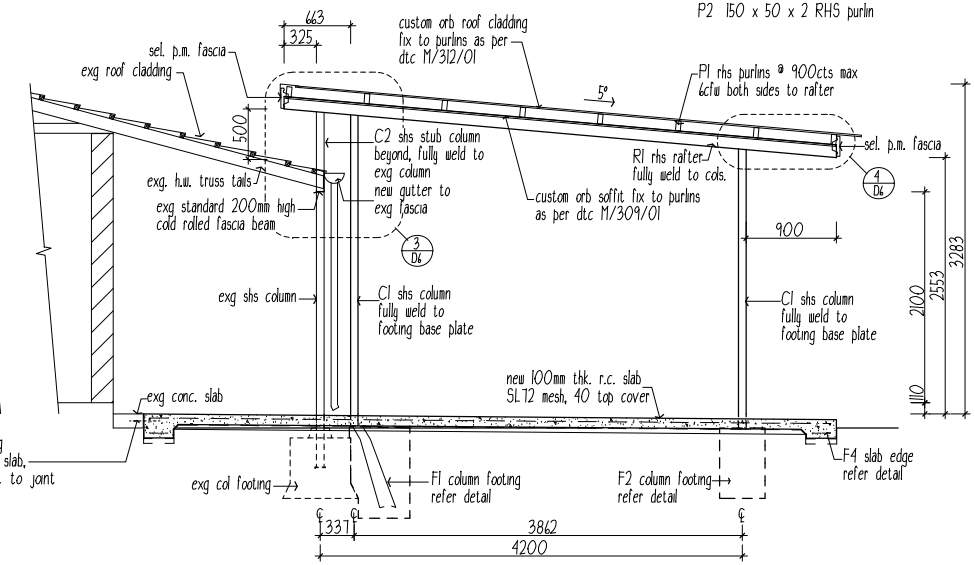

Wilkins Drafting Service Ph.0457889990	Project Title: PROPOSED UNDERCOVER AREA RANGER HOUSE R4-B JABIRU HOUSING JABIRU, N.T.	Drawing Title: ELEVATIONS SECTION A	Client: Gundjeihmi Aboriginal Corporation.
			Scale: as shown on A3 / Date: 02/12/2021
			Job No.: J21403-R4B / Dwg. No.: D2 of 1

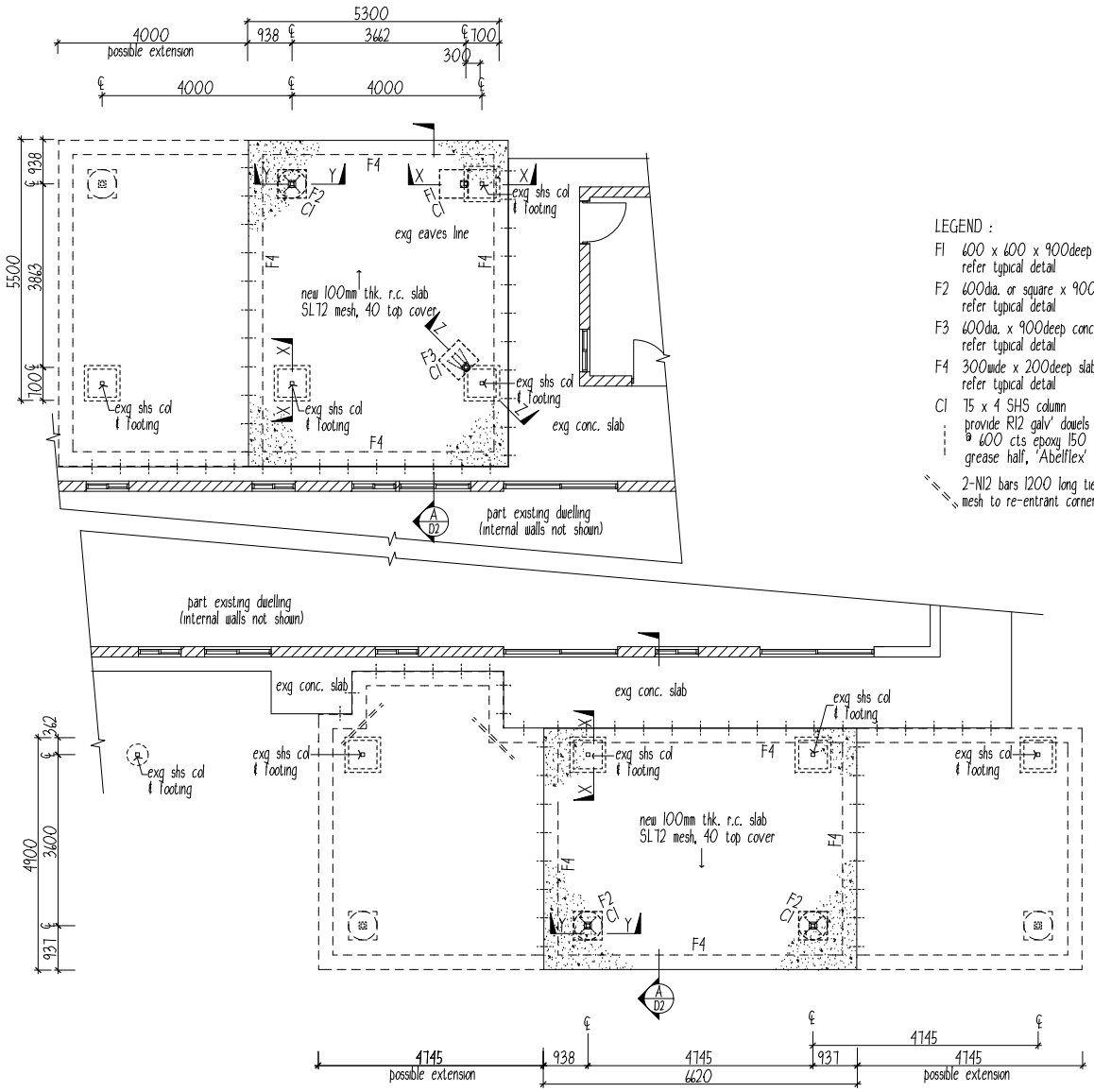

LEGEND :

F1 600 x 600 x 900deep conc. footing
refer typical detail

F2 600dia. or square x 900deep conc. footing
refer typical detail

F3 600dia. x 900deep conc. footing
refer typical detail

F4 300wide x 200deep slab edge thickening
refer typical detail

C1 75 x 4 SHS column
provide R12 galv' dowels 300 long @ 600cts
@ 600 cts epoxy 150 into exg. slab,
grease half, 'Abelflex' & sealant to joint

2-N12 bars 1200 long tied under top
mesh to re-entrant corners.

SLAB/FOOTING PLAN
1 : 100

CERTIFIED AS STRUCTURALLY ADEQUATE

KFB Engineers Civil & Structural
1/38-42 Pease St, Cairns | PO Box 927, Cairns Q 4870
P: 07 40320492 | F: 07 40320092 | E: email@kfbeng.com.au

Date: 2/12/21 Signed:
Job No: K-9712
NT Reg. 33968ES

Wilkins Drafting Service
Ph.0457889990

Project Title	Drawing Title	Client	
PROPOSED UNDERCOVER AREA RANGER HOUSE R4-B JABIRU HOUSING JABIRU, N.T.	SLAB/FOOTING PLAN	Gundjeihmi Aboriginal Corporation.	
		Scale as shown on A3	Date 02/12/2021
		Job No. J21403-R4B	Dwg. No. D3 of 7

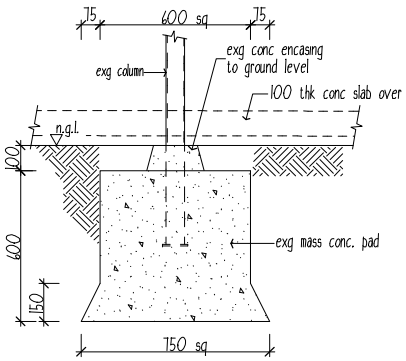

DETAIL WW - TYPICAL EXISTING FOOTING
1 : 20

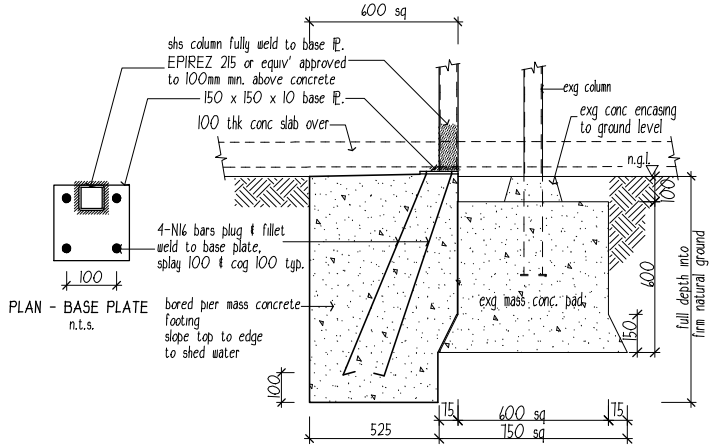

DETAIL XX - F1 - TYPICAL DETAIL
1 : 20

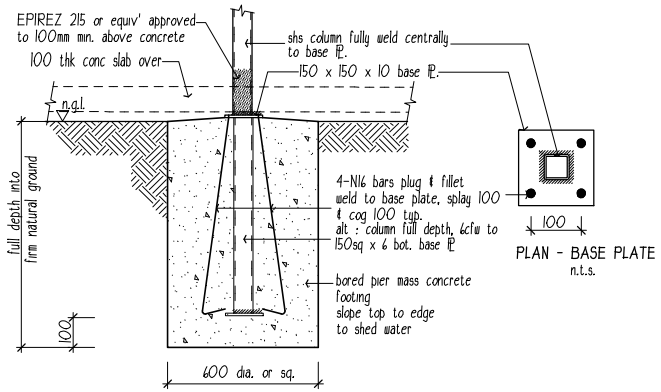

DETAIL YY - F2 - TYPICAL DETAIL
1 : 20

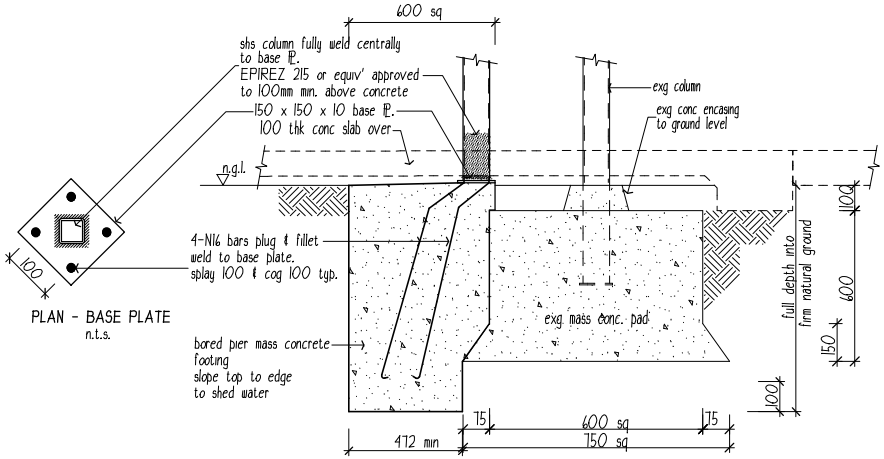

DETAIL ZZ - F3 - TYPICAL DETAIL
1 : 20

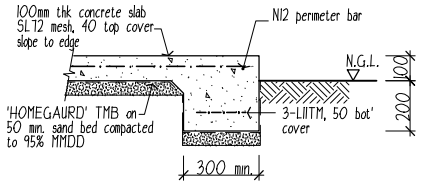

F4 - TYPICAL DETAIL
1 : 20

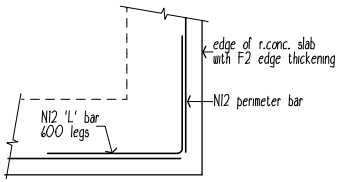

TYPICAL CORNER REINF' PLAN DETAIL
N.T.S.

LEGEND :
F1 600 x 600 x 900deep conc. footing
refer typical detail
F2 600dia. or square x 900deep conc. footing
refer typical detail
F3 600dia. x 900deep conc. footing
refer typical detail
F4 300wide x 200deep slab edge thickening
refer typical detail

CERTIFIED AS STRUCTURALLY ADEQUATE

KFB Engineers — Civil & Structural
1/38-42 Pease St, Cairns | PO Box 927, Cairns Q 4870
P: 07 40320492 | F: 07 40320092 | E: email@kfbeng.com.au

Date: 2/12/21 Signed:
Job No: K-9712 NT Reg. 33968ES

Wilkins Drafting Service
Ph.0457889990

Project Title
PROPOSED UNDERCOVER AREA
RANGER HOUSE R4-B
JABIRU HOUSING
JABIRU, N.T.

Drawing Title
TYPICAL FOOTING DETAILS

Client: Gundjeihmi Aboriginal Corporation.
Scale: as shown on A3
Date: 02/12/2021
Job No.: J21403-R4B
Dwg. No.: D4 of 7

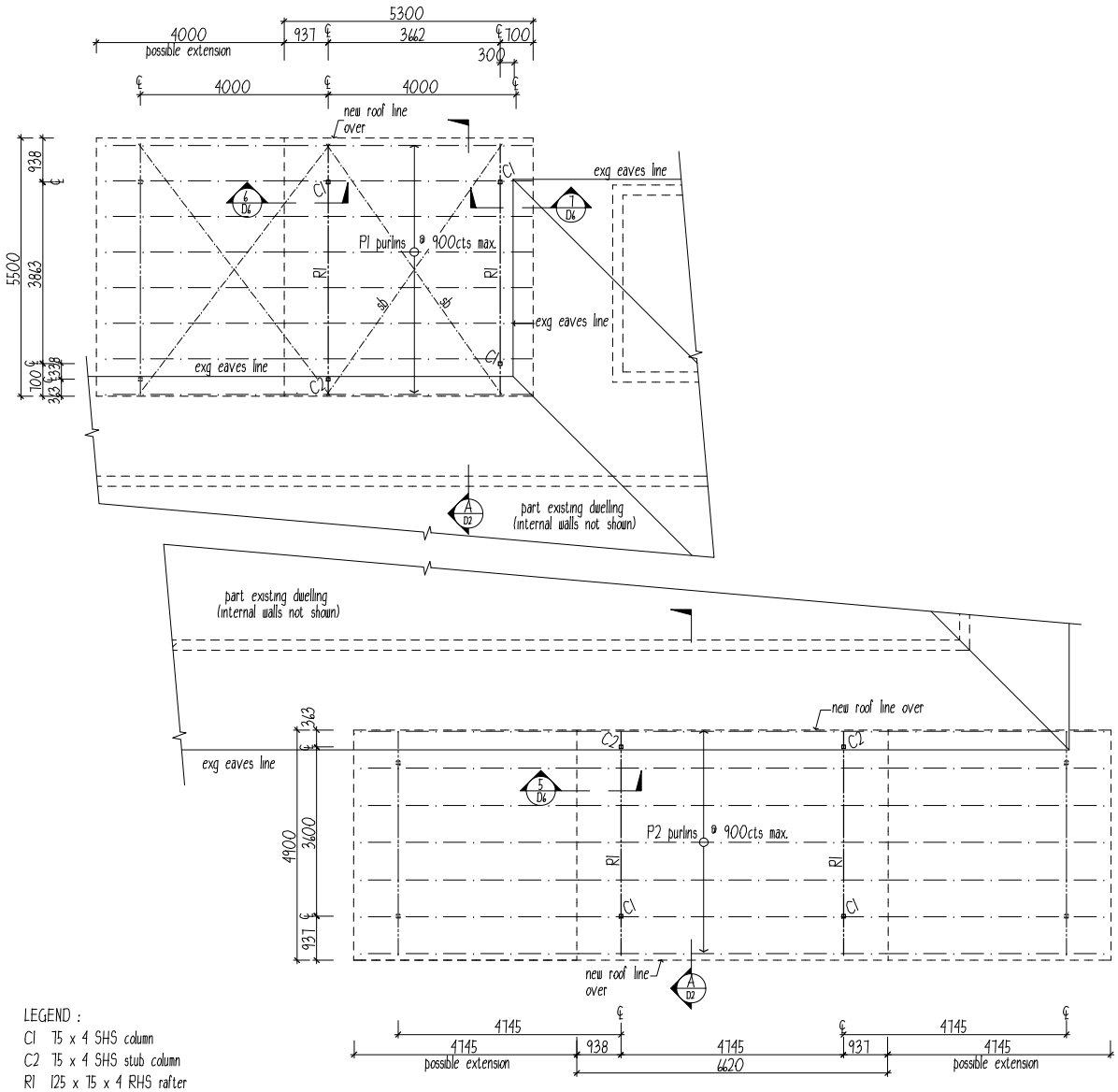

LEGEND :

C1 75 x 4 SHS column
C2 75 x 4 SHS stub column
R1 125 x 75 x 4 RHS rafter
P1 100 x 50 x 2 RHS purlin
P2 150 x 50 x 2 RHS purlin

ROOF FRAMING PLAN
1 : 100

CERTIFIED AS STRUCTURALLY ADEQUATE

KFB Engineers — Civil & Structural
1/38-42 Pease St, Cairns | PO Box 927, Cairns Q 4870
P: 07 40320492 | F: 07 40320092 | E: email@kfbeng.com.au

Date: 2/12/21 Signed:
Job No: K-9712 NT Reg. 33968ES

Wilkins Drafting Service Ph.0457889990	Project Title: PROPOSED UNDERCOVER AREA RANGER HOUSE R4-B JABIRU HOUSING JABIRU, N.T.	Drawing Title: ROOF FRAMING PLAN	Client: Gundjeihmi Aboriginal Corporation.
			Scale: as shown on A3 — Date: 02/12/2021
			Job No.: J21403-R4B — Dwg. No.: D5 of 7

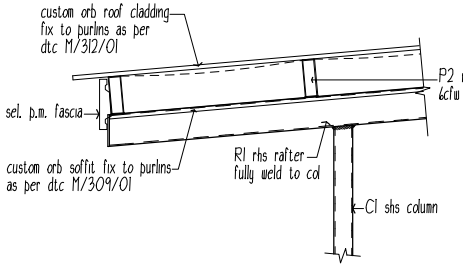

DETAIL 1 / D2
1 : 20

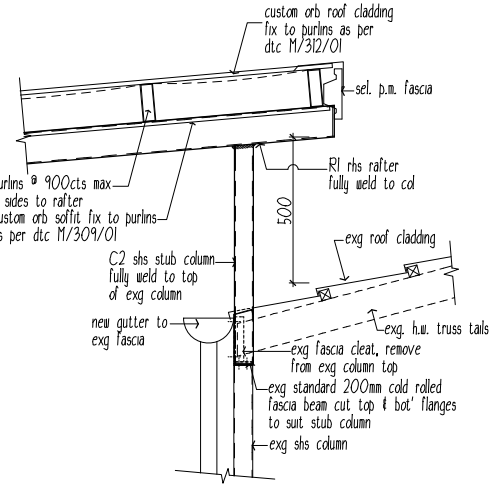

DETAIL 2 / D2
1 : 20

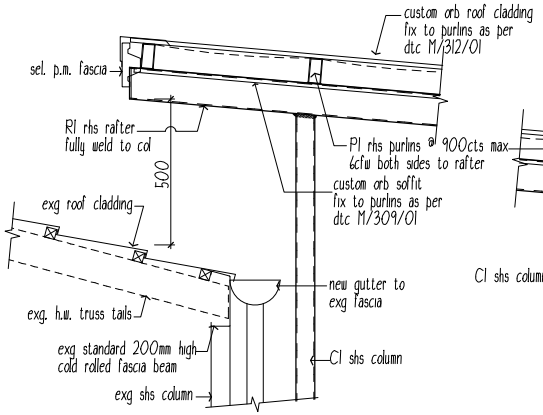

DETAIL 3 / D2
1 : 20

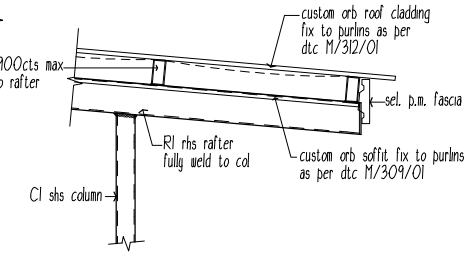

DETAIL 4 / D2
1 : 20

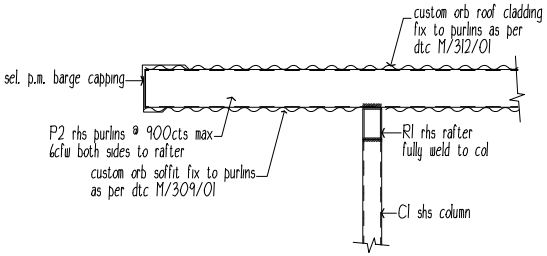

DETAIL 5 / D5
1 : 20

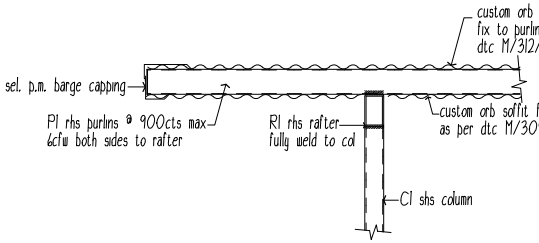

DETAIL 6 / D5
1 : 20

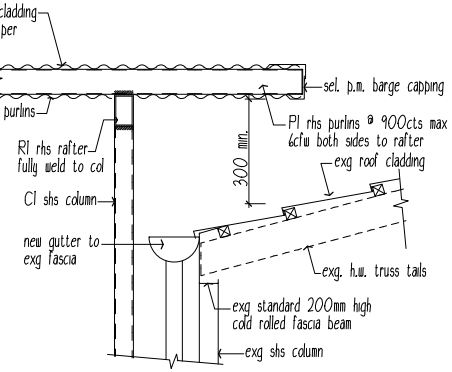

DETAIL 7 / D5
1 : 20

LEGEND :

C1 75 x 4 SHS column
C2 75 x 4 SHS stub column
R1 125 x 75 x 4 RHS rafter
P1 100 x 50 x 2 RHS purlin
P2 150 x 50 x 2 RHS purlin

CERTIFIED AS STRUCTURALLY ADEQUATE

KFB Engineers — Civil & Structural
1/38-42 Pease St, Cairns | PO Box 927, Cairns Q 4870
P: 07 40320492 | F: 07 40320092 | E: email@kfbeng.com.au

Date: 2/12/21 Signed:
Job No: K-9712 NT Reg. 33968ES

Wilkins Drafting Service
Ph.0457889990

Project Title
PROPOSED UNDERCOVER AREA
RANGER HOUSE R4-B
JABIRU HOUSING
JABIRU, N.T.

Drawing Title
DETAILS 1 - 7

Client: Gundjeihmi Aboriginal Corporation.
Scale: as shown on A3
Date: 02/12/2021
Job No.: J21403-R4B
Dwg. No.: D6 of 7

NOTES

GENERAL

1. All work shall be in accordance with the Building Code of Australia & comply with the relevant current Standards Association of Australia codes and the local statutory authorities' regulations, except where varied by the contract documents.
2. Verify all dimensions relevant to setting out and off-site work before construction and fabrication is commenced. Do not scale the drawings unless noted otherwise.
3. All dimensions are in millimetres unless stated otherwise. All levels are expressed in metres.
4. Read drawings in conjunction with all other consultants' drawings and specifications and with such other written instructions as may be issued during the course of the contract Refer all discrepancies to the Superintendent for decision before proceeding with the work.
5. During construction maintain the structure in a stable condition and ensure no part is overstressed under construction activities.
6. Seek approval for all substitutions from the Superintendent before the work commences.
7. Keep the site in a clean & tidy condition thoughout construction & at the completion of work remove all litter & debris to the satisfaction of the superintendent.

DESIGN CRITERIA

1. Dead & live loads - in accordance with AS1170.1 - 2011
2. The Design Wind Criteria is as follows :

Region	C
Design Wind Speed	V500 Vr = 69m/s
Terrain Category	2.5
Internal Pressure Coefficient	+0.7 / -0.65

External Pressure Coefficient in accordance with AS1170 - 2011

3. Foundation design bearing capacity = 100kPa (allowable).

Wind Classification C2 (AS4055)

Ultimate and Serviceability Limit State Design Wind Pressures

Wind Classification	Design gust wind speed (m/s)		Design pressures for windows (kPa)			
	Vh,u	Vh,s	Greater than 1.2m from corners		Up to 1.2m from corners	
	ULS	SLS	ULS	SLS	ULS	SLS
C1	50	32	±1.80	±0.55	-2.70	-0.83
C2	61	39	±2.68	±0.88	-4.02	-1.23
C3	74	47	±3.94	±1.19	-5.91	-1.79

EARTHWORKS

1. Earthworks construction shall comply with AS3798 & AS2870.
2. Excavation & service trenches shall comply with the following guidelines unless otherwise approved by the engineer

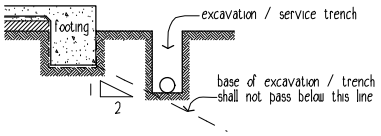

TERMITE MANAGEMENT SYSTEM

1. Termite Management System to be installed & certified by an approved applicator in accordance with AS 3660.1.
2. Provide Min. 300 wide x 50mm concrete mowing strip over perimeter reticulation system as to AS3660.1
3. A durable certificate is to be fixed in the meter box on completion.

FOOTINGS

1. Found all footings in original undisturbed ground having a safe bearing capacity of 150 kPa as noted on drawings. Before any concrete is placed, ensure the safe bearing capacity is verified.
2. Backfill sewers, stormwater drains and other in-ground services adjacent to buildings, if laid before footings are constructed, with approved fill placed in 200mm Max. layers and compacted to 95% MMDD.
   If laid after footings are constructed, avoid undermining of footings by either fully shoring trenches, or keeping excavation outside an influence line extended downwards at a slope of 1 in 2 from the the bottom corner of all footings. Backfill trenches as noted above.
3. Use selected fill (gravel, decomposed or broken rock) free from clay clumps and organic matter, conforming with the following grading requirements :

AS METRIC SIEVE	% PASSING BY WEIGHT	AS METRIC SIEVE	% PASSING BY WEIGHT
75.0 mm	100	2.36 mm	20 - 50
9.5 mm	30 - 100	0.075 mm	5 - 25

   Strip the area of the works of all top soil and deleterious material prior to placement of fill or compaction. Compact fill up to 150 mm below slab level in 150 mm layers to 95% MMDD.
4. Compact fill in the 150 mm layer immediately below slab level to 95% MMDD. Compact sand blinding layer below concrete slab by vibration plate or flooding to 95% MMDD.
5. Backfill over excavation with lean mix concrete.
6. Builder to confirm site classification "S" to AS2870

DRAINAGE

1. The contractor shall determine the exact location of existing services prior to any installation or commencement of work.

CONCRETE

1. All slabs & footings shall be constructed to comply with the requirements of AS2870 - 2011
2. Concrete slump shall be 80 ± 15mm. No admixtures to be used without approval from the engineer.
3. Concrete cover to be maintained by the use of approved chairs at nominal 800cts. Conduits & pipes shall not be placed within concrete cover.
4. Mesh reinforcement laps shall be at least one full wire spacing plus 25mm. Reinforcement shall be in accordance with AS4671.
5. Continuously cure slabs for a minimum of 7 days after casting by ponding, covering with a waterproof membrane or other approved means.

STEEL

1. All structural steelwork shall comply with AS 4100 - SAA Steel Struct. Code & associated Australian Standards.
2. Ensure welding is performed by an experienced operator in accordance with AS 1554.
3. Use hot dipped galvanised commerial bolts (Grade 4.6/S) to AS1111 and AS 1112, tightened to a snug tight fit unless otherwise shown. Where bolts are designated grade 8.8/S, use high strength bolts to AS 1252, tightened to a snug tigh fit.
   Where bolts are designated 8.8/TF or grade 8.8/TB use high strength steel bolts (grade 8.8/S) to AS 1252, fully tensioned in accordance with AS 1511.
4. During construction provide and leave in place, untill permanent bracing elements are constructed, such temporary bracing as is necessary to stabilise the structure during erection.
5. Seal the ends of all tubular members with nominal thickness plates and continuous fillet welds unless otherwise shown.
6. Except where otherwise shown fully weld connections with 6mm continuous fillet general purpose (G.P.) welds for the full contact area. Special purpoes welds are designated (S.P.)
7. Unless otherwise specified, paint all external steelwork with one shop coat of Inorganic Zinc Silicate primer after blast cleaning to a class 2.5 finish. Touch up damaged areas with cold galv after power cleaning. members encased in concrete, fire sprayed or HSTF bolted connections must not be painted
8. Unless otherwise specified paint all internal steelwork with one shop coat of Red Oxide Zinc Phoshate primer after blast cleaning to a class 2 finish. Touch up damaged areas as required after power cleaning. Alternatively for RHS, use 'Duragal' and touch up with Dimet Zeden or equal and paint for long term protection to manufacturers recommendations.
9. Unless otherwise specified paint steelwork below finished surface level and not concrete encased with high build epoxy.
10. Unless otherwise specified paint all steelwork one shop coat of Red Oxide Zinc Phosphate primer. Do not paint members encased in concrete, fire sprayed or friction grip bolted connections.
11. Protective coatings to all external steelwork to comply with BCA-96 Table 3.4.4.2.

TIMBER

1. Structural timber shall be minimum stress grade F17 (U.N.O.) to comply with AS1720

SITE DRAINAGE

1. Ground adjacent to building shall be graded away to fall at least 50mm over 1 metre width to satisfy BCA clause 3.1.2.3 surface water drainage.

CERTIFIED AS STRUCTURALLY ADEQUATE

KFB Engineers — Civil & Structural
1/38-42 Pease St, Cairns | PO Box 927, Cairns Q 4870
P: 07 40320492 | F: 07 40320092 | E: email@kfbeng.com.au

Date: 2/12/21 Signed: NT Reg. 33968ES
Job No: K-9712

Wilkins Drafting Service
Ph.0457889990

Project Title: PROPOSED UNDERCOVER AREA RANGER HOUSE R4-B JABIRU HOUSING JABIRU, N.T.	Drawing Title: STRUCTURAL NOTES	Client: Gundjeihmi Aboriginal Corporation.	
		Scale: as shown on A3	Date: 02/12/2021
		Job No.: J21403-R4B	Dwg. No.: D1 of 7

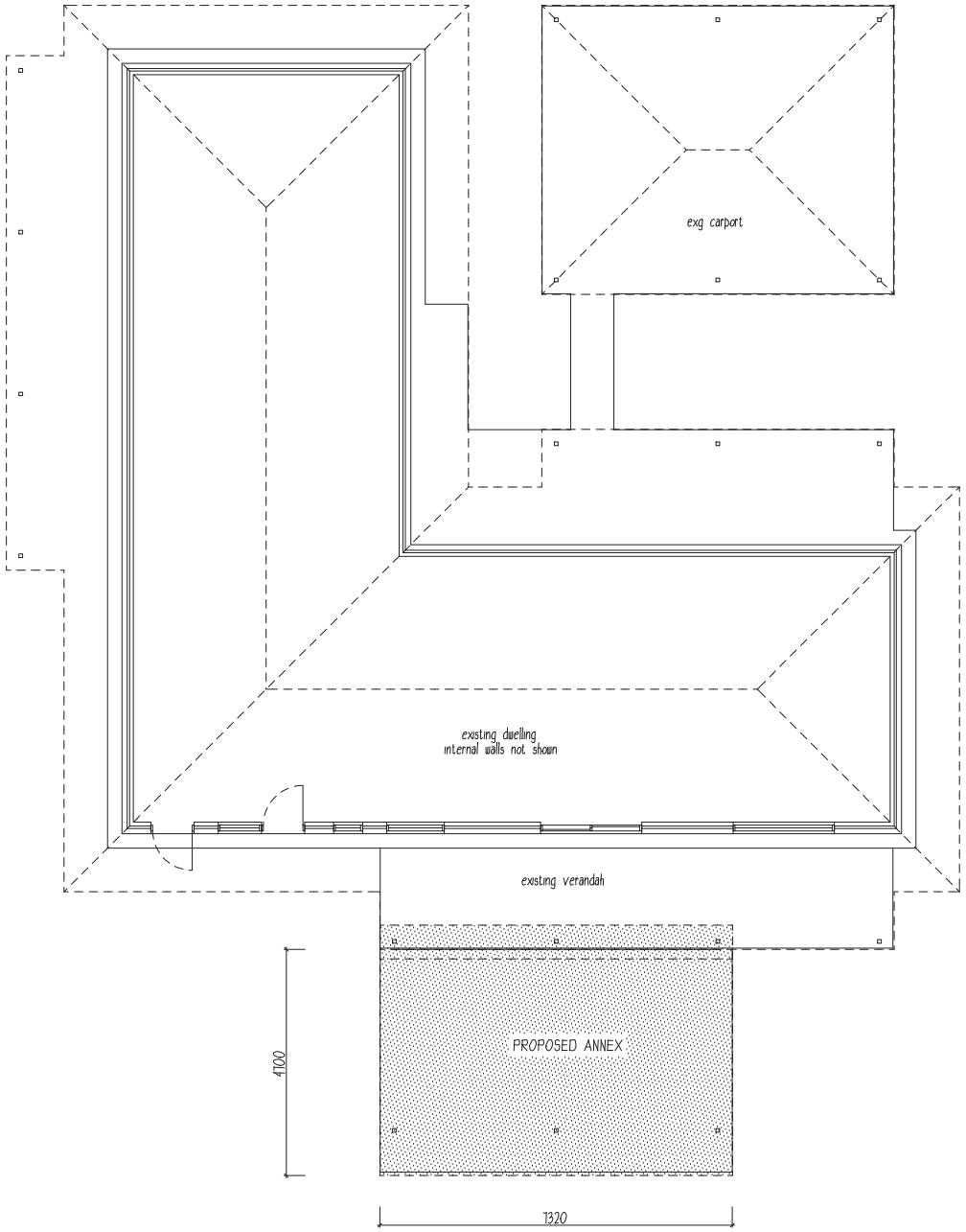

'L' SHAPE - LAYOUT PLAN
1 : 100

STRUCTURAL NOTES

DESIGN CRITERIA

1. Dead & live loads - in accordance with AS1170.1 - 2011
2. The Design Wind Criteria is as follows :
   Region C
   Design Wind Speed V500 Vr = 69m/s
   Terrain Category 2.5
   Internal Pressure Coefficient +0.7 / -0.65
   External Pressure Coefficient in accordance with AS1170 - 2011
3. Foundation design bearing capacity = 100kPa (allowable).

   Wind Classification C2 (AS4055)

Ultimate and Serviceability Limit State Design Wind Pressures

Wind Classification	Design gust wind speed (m/s)		Design pressures for windows (kPa)			
	Vh,u	Vh,s	Greater than 1.2m from corners		Up to 1.2m from corners	
	ULS	SLS	ULS	SLS	ULS	SLS
C1	50	32	±1.80	±0.55	-2.70	-0.83
C2	61	39	±2.68	±0.88	-4.02	-1.23
C3	74	47	±3.94	±1.19	-5.91	-1.79

EARTHWORKS

1. Earthworks construction shall comply with AS3798 & AS2870.
2. Excavation & service trenches shall comply with the following guidelines unless otherwise approved by the engineer

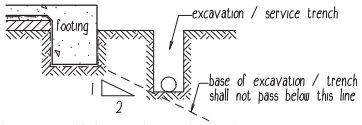

3. The contractor shall determine the exact location of existing services prior to any installation or commencement of work.

TERMITE MANAGEMENT SYSTEM

1. Termite Management System to be installed & certified by an approved applicator in accordance with AS 3660.1.
2. Provide Min. 300 wide x 50mm concrete mowing strip over perimeter reticulation system as to AS3660.1
3. A durable certificate is to be fixed in the meter box on completion.

FOOTINGS

1. Found all footings in original undisturbed ground having a safe bearing capacity of 150 kPa as noted on drawings. Before any concrete is placed, ensure the safe bearing capacity is verified.
2. Backfill sewers, stormwater drains and other in-ground services adjacent to buildings, if laid before footings are constructed, with approved fill placed in 200mm Max. layers and compacted to 95% MMDD.
   If laid after footings are constructed, avoid undermining of footings by either fully shoring trenches, or keeping excavation outside an influence line extended downwards at a slope of 1 in 2 from the the bottom corner of all footings. Backfill trenches as noted above.
3. Use selected fill (gravel, decomposed or broken rock) free from clay clumps and organic matter, conforming with the following grading requirements :

AS METRIC SIEVE	% PASSING BY WEIGHT	AS METRIC SIEVE	% PASSING BY WEIGHT
75.0 mm	100	2.36 mm	20 - 50
9.5 mm	30 - 100	0.075 mm	5 - 25

   Strip the area of the works of all top soil and deleterious material prior to placement of fill or compaction. Compact fill up to 150 mm below slab level in 150 mm layers to 95% MMDD.
4. Compact fill in the 150 mm layer immediately below slab level to 95% MMDD. Compact sand blinding layer below concrete slab by vibration plate or flooding to 95% MMDD.
5. Backfill over excavation with lean mix concrete.
6. Builder to confirm site classification "S" to AS2870

CONCRETE

1. All slabs & footings shall be constructed to comply with the requirements of AS2870 - 2011
2. Concrete slump shall be 80 +-15mm. No admixtures to be used without approval from the engineer.
3. Concrete cover to be maintained by the use of approved chairs at nominal 800cts. Conduits & pipes shall not be placed within concrete cover.
4. Mesh reinforcement laps shall be at least one full wire spacing plus 25mm. Reinforcement shall be in accordance with AS4671.
5. Continuously cure slabs for a minimum of 7 days after casting by ponding, covering with a waterproof membrane or other approved means.

STEEL

1. All structural steelwork shall comply with AS 4100 - SAA Steel Struct. Code & associated Australian Standards.
2. Ensure welding is performed by an experienced operator in accordance with AS 1554.
3. Use hot dipped galvanised commerial bolts (Grade 4.6/S) to AS1111 and AS 1112, tightened to a snug tight fit unless otherwise shown. Where bolts are designated grade 8.8/S, use high strength bolts to AS 1252, tightened to a snug tigh fit.
   Where bolts are designated 8.8/TF or grade 8.8/TB use high strength steel bolts (grade 8.8/S) to AS 1252, fully tensioned in accordance with AS 1511.
4. During construction provide and leave in place, untill permanent bracing elements are constructed, such temporary bracing as is necessary to stabilise the structure during erection.
5. Seal the ends of all tubular members with nominal thickness plates and continuous fillet welds unless otherwise shown.
6. Except where otherwise shown fully weld connections with 6mm continuous fillet general purpose (G.P.) welds for the full contact area. Special purpoes welds are designated (S.P.)
7. Unless otherwise specified, paint all external steelwork with one shop coat of Inorganic Zinc Silicate primer after blast cleaning to a class 2.5 finish. Touch up damaged areas with cold galv after power cleaning. members encased in concrete, fire sprayed or HSTF bolted connections must not be painted
8. Unless otherwise specified paint all internal steelwork with one shop coat of Red Oxide Zinc Phoshate primer after blast cleaning to a class 2 finish. Touch up damaged areas as required after power cleaning. Alternatively for RHS, use 'Duragal' and touch up with Dimet Zeden or equal and paint for long term protection to manufacturers recommendations.
9. Unless otherwise specified paint steelwork below finished surface level and not concrete encased with high build epoxy.
10. Unless otherwise specified paint all steelwork one shop coat of Red Oxide Zinc Phosphate primer. Do not paint members encased in concrete, fire sprayed or friction grip bolted connections.
11. Protective coatings to all external steelwork to comply with BCA-96 Table 3.4.4.2.

TIMBER

1. Structural timber shall be mmimum stress grade F17 (U.N.O.) to comply with AS1720

INSULATION

1.Aircell 65 or equivalent sarking planket to be installed to manufacturers instructions

CERTIFIED AS STRUCTURALLY ADEQUATE

KFB Engineers Civil & Structural
1/38-42 Pease St, Cairns | PO Box 927, Cairns Q 4870
P: 07 40320492 | F: 07 40320092 | E: email@kfbeng.com.au

Date: 13/6/23 Signed:
Job No: K-10582 NT Reg. 33968ES

amend: a :change dwg. title & layouts, add dwgs: 06/06/23

Wilkins Drafting Service Ph.0457889990	Project Title: PROPOSED UNDERCOVER AREA TO EXISTING 'L' SHAPE HOUSE JABIRU HOUSING JABIRU. N.T.	Drawing Title: 'L' SHAPE - LAYOUT PLAN STRUCTURAL NOTES	Client: Jabiru Kabolkmaken LTD.	
			Scale: as shown on A3	Date: 08/09/2022
			Job No.: J22418	Dwg. No.: D1a of 8

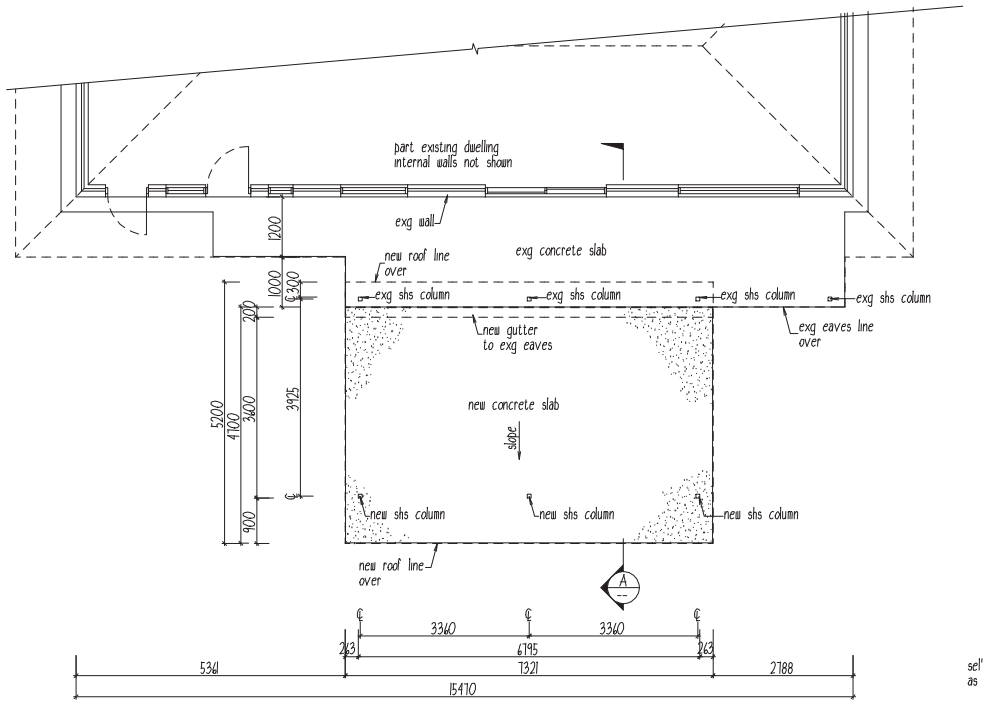

FLOOR PLAN
1 : 100

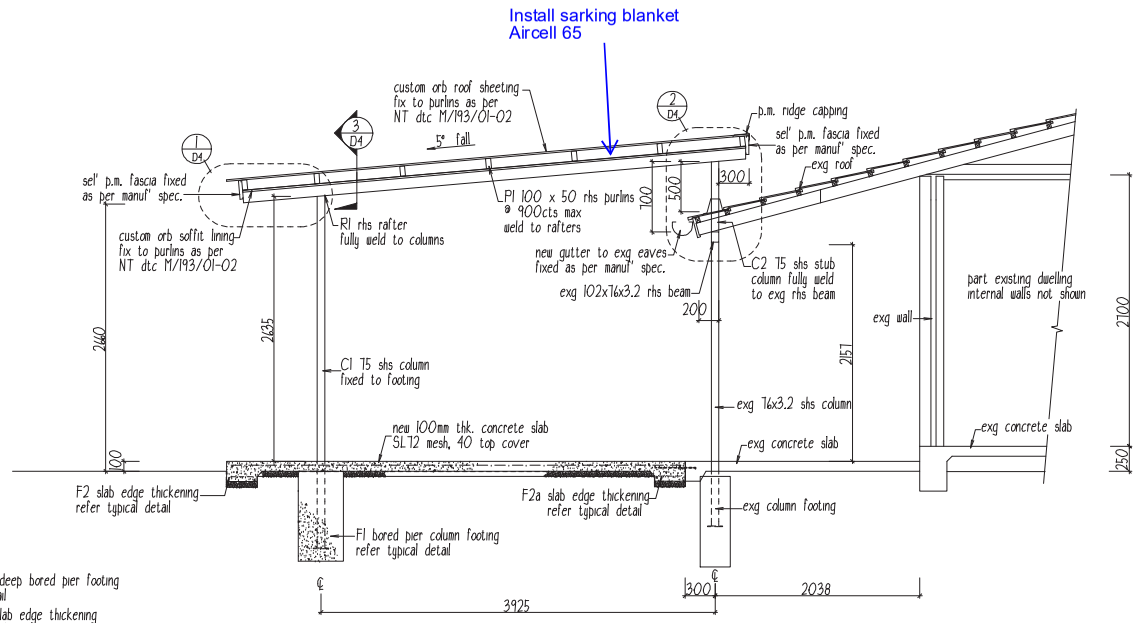

SECTION A
1 : 50

GENERAL NOTES

1. These drawings contain information required for obtaining abuilding permit, they are not detailed sufficiently for a specification for a building contract with a builder. An additional specification should be written to include painting, electrical & plumbing fittings & secondary fixings (kitchen, robes, cupboards, etc.)
2. All work & materials shall comply with the current Building Code of Australia & comply with the relevant current Standards Association of Australia codes and the local statutory authorities regulations (N.T. deemed to comply standards)
3. All dimensions are in millimetres unless stated otherwise. All levels are expressed in metres. Verify all dimensions relevant to setting out and off-site work before construction and fabrication is commenced as no reponsibilty will be taken after construction commences.
4. Read drawings in conjunction with all other consultants' drawings and specifications and with such other written instructions as may be issued during the course of the contract Refer all discrepancies to the Superintendent for decision before proceeding with the work.
5. During construction maintain the structure in a stable condition and ensure no part is overstressed under construction activities. Seek approval for all substitutions from the Superintendent before the work commences.
6. Keep the site in a clean & tidy condition thoughout construction & at the completion of work remove all litter & debris to the satisfaction of the superintendent.

LEGEND:

F1	450dia. x 900 deep bored pier footing refer typical detail
F2	300w x 100d slab edge thickening refer typical detail
F2a	300w x 100d slab edge thickening with R12 dowels to exg slab edge refer typical detail
C1	T5 x 4 shs column fixed to footing
C2	T5 x 4 shs stub column fully weld to exg rhs beam
R1	125 x 75 x 4 rhs rafter fully weld to columns
P1	P1 100 x 50 x 2 rhs purlins @ 900cts max weld to rafters

CERTIFIED AS STRUCTURALLY ADEQUATE

KFB Engineers — Civil & Structural
1/38-42 Pease St, Cairns | PO Box 927, Cairns Q 4870
P: 07 40320492 | F: 07 40320092 | E: email@kfbeng.com.au

Date: 13/6/23 Signed:
Job No: K-10582 NT Reg. 33968ES

amend: a :change dwg. title & layouts, add dwgs: 06/06/23

Wilkins Drafting Service Ph.0457889990	Project Title: PROPOSED UNDERCOVER AREA TO EXISTING 'L' SHAPE HOUSE JABIRU HOUSING JABIRU. N.T.	Drawing Title: FLOOR PLAN SECTION A GENERAL NOTES	Client: Jabiru Kabolkmaken LTD.	
			Scale: as shown on A3	Date: 08/09/2022
			Job No.: J22418	Dwg. No.: D2a of 8

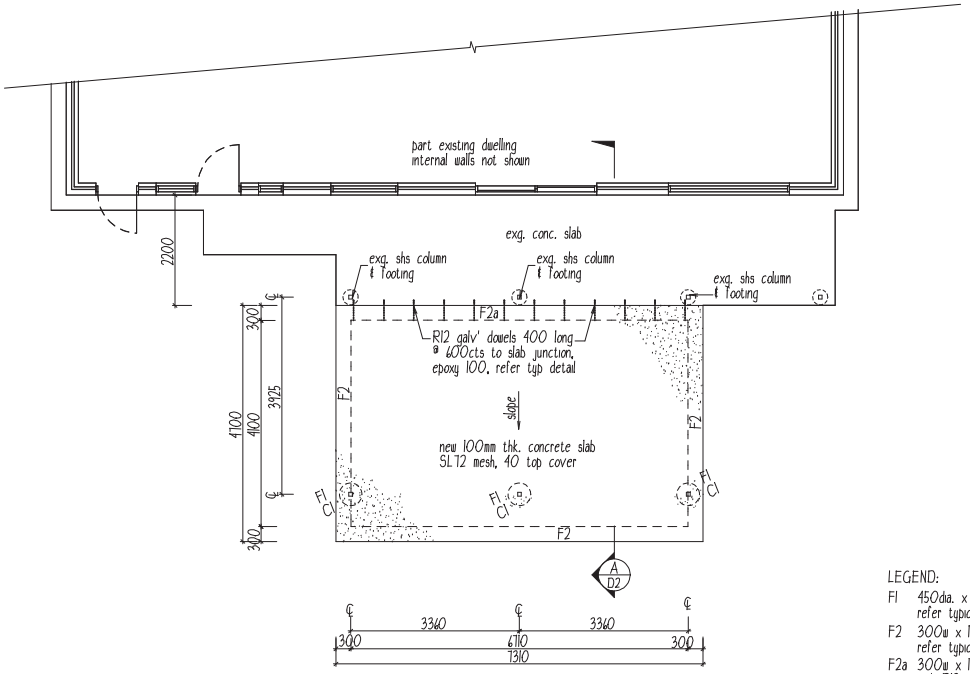

SLAB/FOOTING PLAN A
1 : 100

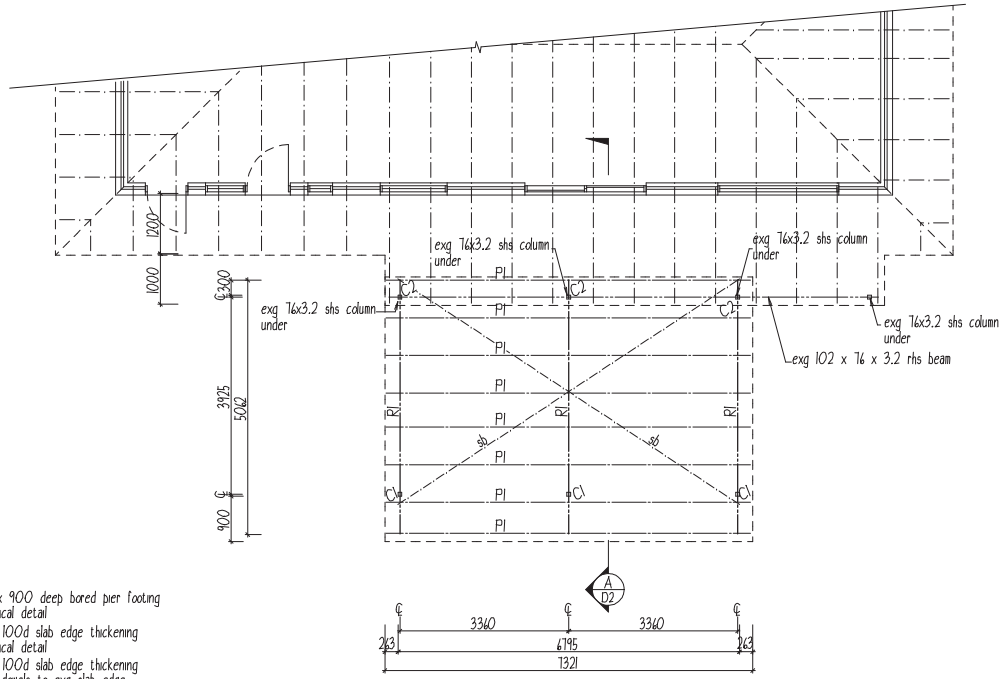

ROOF FRAMING PLAN A
1 : 100

LEGEND:

F1	450dia. x 900 deep bored pier footing refer typical detail
F2	300w x 100d slab edge thickening refer typical detail
F2a	300w x 100d slab edge thickening with R12 dowels to exg slab edge refer typical detail
C1	75 x 4 shs column fixed to footing
C2	75 x 4 shs stub column fully weld to exg rhs beam
R1	125 x 75 x 4 rhs rafter fully weld to columns
P1	100 x 50 x 2 rhs purlins @ 900cts max weld to rafters
sb	30 x 1mm galv' strap bracing pulled tight & fixed with 3/10-16x16 wafer head teks each end @ 1 tek to each purling crossing.

CERTIFIED AS STRUCTURALLY ADEQUATE

KFB Engineers — Civil & Structural
1/38-42 Pease St, Cairns | PO Box 927, Cairns Q 4870
P: 07 40320492 | F: 07 40320092 | E: email@kfbeng.com.au

Date: 13/6/23 Signed:
Job No: K-10582 NT Reg. 33968ES

amend: a :change dwg. title & layouts, add dwgs: 06/06/23

Wilkins Drafting Service Ph.0457889990	Project Title: PROPOSED UNDERCOVER AREA TO EXISTING 'L' SHAPE HOUSE JABIRU HOUSING JABIRU. N.T.	Drawing Title: SLAB/FOOTING PLAN A ROOF FRAMING PLAN A	Client: Jabiru Kabolkmaken LTD.	
			Scale: as shown on A3	Date: 08/09/2022
			Job No.: J22418	Dwg. No.: D3a of 8

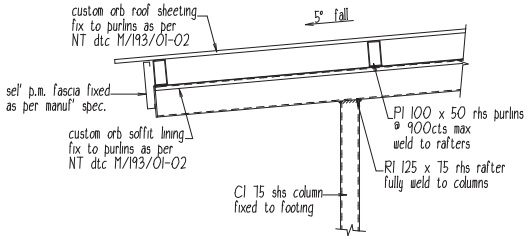

DETAIL 1/D2
1 : 20

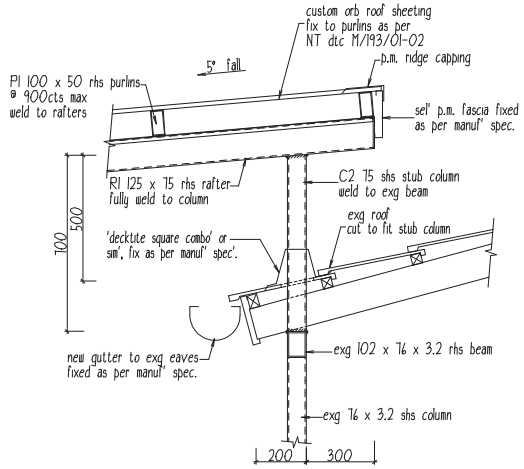

DETAIL 2/D2
1 : 20

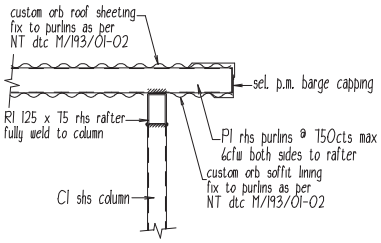

DETAIL 3/D2
1 : 20

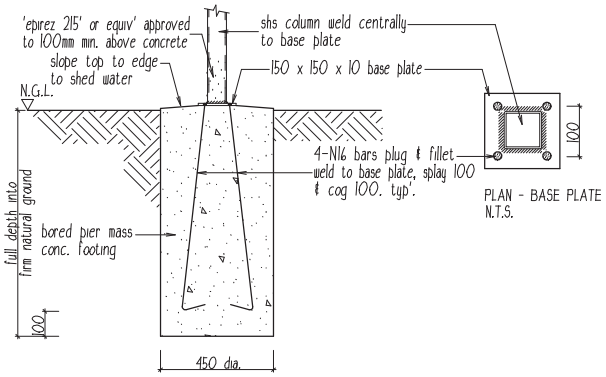

F1 - TYPICAL DETAIL
1 : 20

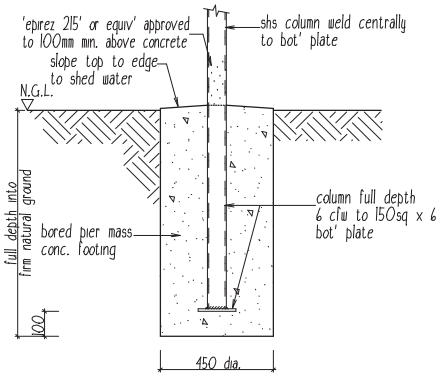

F1 - ALT' DETAIL
1 : 20

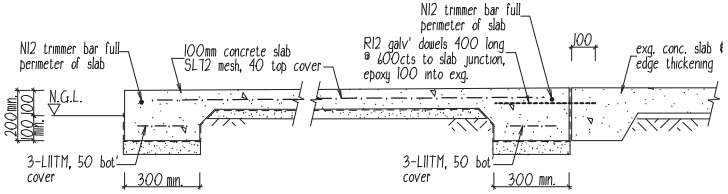

F2 - TYPICAL DETAIL
1 : 20

F2a - TYPICAL DETAIL
1 : 20

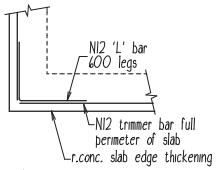

at corners

TYPICAL SLAB REINF' PLAN DETAIL
N.T.S.

CERTIFIED AS STRUCTURALLY ADEQUATE

KFB Engineers — Civil & Structural
1/38-42 Pease St, Cairns | PO Box 927, Cairns Q 4870
P: 07 40320492 | F: 07 40320092 | E: email@kfbeng.com.au

Date: 13/6/23 Signed:
Job No: K-10582 NT Reg. 33968ES

amend: a :change dwg. title & layouts, add dwgs: 06/06/23

Wilkins Drafting Service Ph.0457889990	Project Title: PROPOSED UNDERCOVER AREA TO EXISTING 'L' SHAPE HOUSE JABIRU HOUSING JABIRU. N.T.	Drawing Title: TYPICAL FOOTING DETAILS DETAILS 1, 2 & 3	Client: Jabiru Kabolkmaken LTD.	
			Scale: as shown on A3	Date: 08/09/2022
			Job No.: J22418	Dwg. No.: D4a of 8

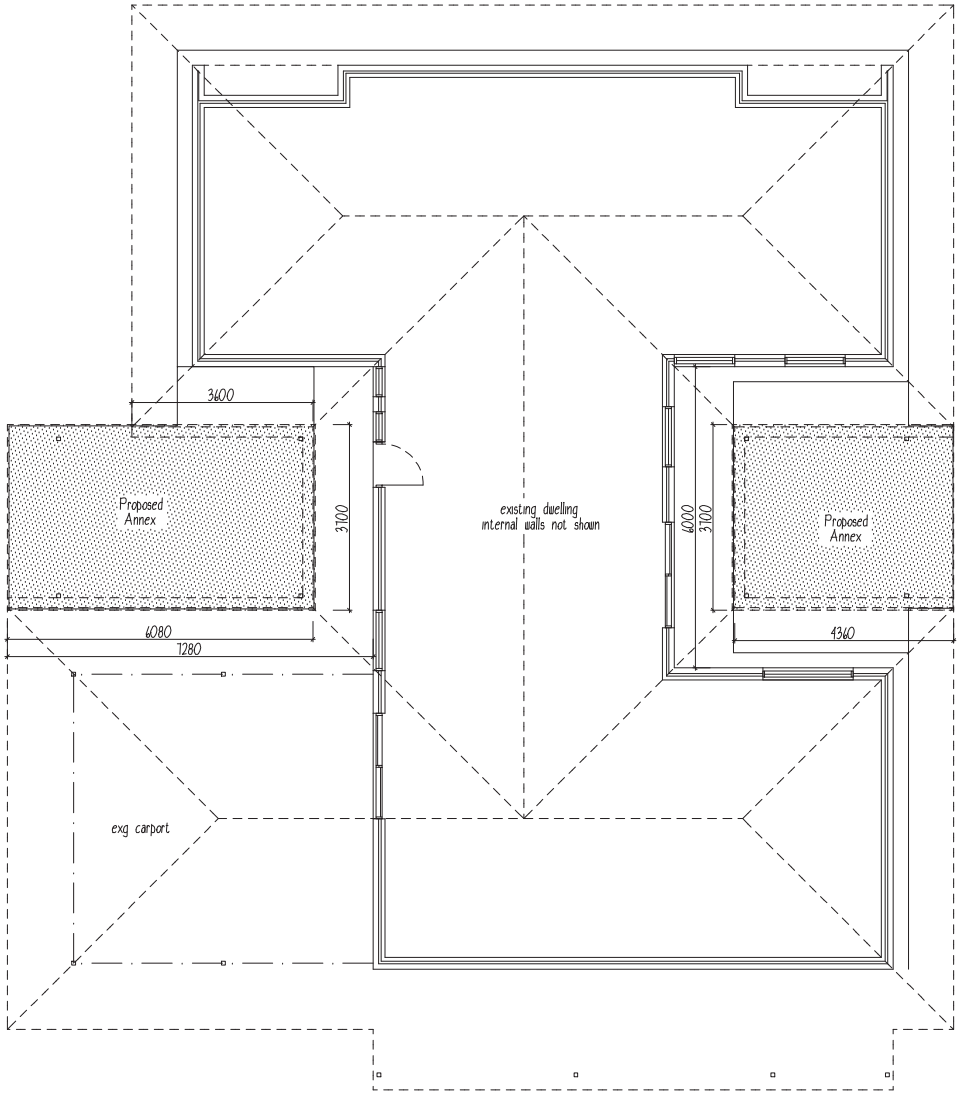

'H' SHAPE - LAYOUT PLAN
1 : 200

STRUCTURAL NOTES

DESIGN CRITERIA

1. Dead & live loads - in accordance with AS1170.1 - 2011
2. The Design Wind Criteria is as follows :
   Region C
   Design Wind Speed V500 Vr = 49m/s
   Terrain Category 2.5
   Internal Pressure Coefficient +0.7 / -0.65
   External Pressure Coefficient in accordance with AS1170 - 2011
3. Foundation design bearing capacity = 100kPa (allowable).

   Wind Classification C2 (AS4055)

Ultimate and Serviceability Limit State Design Wind Pressures

Wind Classification	Design gust wind speed (m/s)		Design pressures for windows (kPa)			
	Vh,u	Vh,s	Greater than 1.2m from corners		Up to 1.2m from corners	
	ULS	SLS	ULS	SLS	ULS	SLS
C1	50	32	±1.80	±0.55	-2.70	-0.83
C2	61	39	±2.68	±0.88	-4.02	-1.23
C3	74	47	±3.94	±1.19	-5.91	-1.79

EARTHWORKS

1. Earthworks construction shall comply with AS3798 & AS2870.
2. Excavation & service trenches shall comply with the following guidelines unless otherwise approved by the engineer

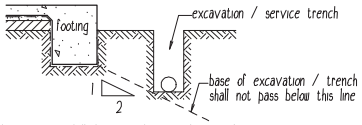

3. The contractor shall determine the exact location of existing services prior to any installation or commencement of work.

TERMITE MANAGEMENT SYSTEM

1. Termite Management System to be installed & certified by an approved applicator in accordance with AS 3660.1.
2. Provide Min. 300 wide x 50mm concrete mowing strip over perimeter reticulation system as to AS3660.1
3. A durable certificate is to be fixed in the meter box on completion.

FOOTINGS

1. Found all footings in original undisturbed ground having a safe bearing capacity of 150 kPa as noted on drawings. Before any concrete is placed, ensure the safe bearing capacity is verified.
2. Backfill sewers, stormwater drains and other in-ground services adjacent to buildings, if laid before footings are constructed, with approved fill placed in 200mm Max. layers and compacted to 95% MMDD.
   If laid after footings are constructed, avoid undermining of footings by either fully shoring trenches, or keeping excavation outside an influence line extended downwards at a slope of 1 in 2 from the the bottom corner of all footings. Backfill trenches as noted above.
3. Use selected fill (gravel, decomposed or broken rock) free from clay clumps and organic matter, conforming with the following grading requirements :

AS METRIC SIEVE	% PASSING BY WEIGHT	AS METRIC SIEVE	% PASSING BY WEIGHT
75.0 mm	100	2.36 mm	20 - 50
9.5 mm	30 - 100	0.075 mm	5 - 25

   Strip the area of the works of all top soil and deleterious material prior to placement of fill or compaction. Compact fill up to 150 mm below slab level in 150 mm layers to 95% MMDD.
4. Compact fill in the 150 mm layer immediately below slab level to 95% MMDD. Compact sand blinding layer below concrete slab by vibration plate or flooding to 95% MMDD.
5. Backfill over excavation with lean mix concrete.
6. Builder to confirm site classification "S" to AS2870

CONCRETE

1. All slabs & footings shall be constructed to comply with the requirements of AS2870 - 2011
2. Concrete slump shall be 80 +-15mm. No admixtures to be used without approval from the engineer.
3. Concrete cover to be maintained by the use of approved chairs at nominal 800cts. Conduits & pipes shall not be placed within concrete cover.
4. Mesh reinforcement laps shall be at least one full wire spacing plus 25mm. Reinforcement shall be in accordance with AS4671.
5. Continuously cure slabs for a minimum of 7 days after casting by ponding, covering with a waterproof membrane or other approved means.

STEEL

1. All structural steelwork shall comply with AS 4100 - SAA Steel Struct. Code & associated Australian Standards.
2. Ensure welding is performed by an experienced operator in accordance with AS 1554.
3. Use hot dipped galvanised commerial bolts (Grade 4.6/S) to AS1111 and AS 1112, tightened to a snug tight fit unless otherwise shown. Where bolts are designated grade 8.8/S, use high strength bolts to AS 1252, tightened to a snug tigh fit.
   Where bolts are designated 8.8/TF or grade 8.8/TB use high strength steel bolts (grade 8.8/S) to AS 1252, fully tensioned in accordance with AS 1511.
4. During construction provide and leave in place, untill permanent bracing elements are constructed, such temporary bracing as is necessary to stabilise the structure during erection.
5. Seal the ends of all tubular members with nominal thickness plates and continuous fillet welds unless otherwise shown.
6. Except where otherwise shown fully weld connections with 6mm continuous fillet general purpose (G.P.) welds for the full contact area. Special purpoes welds are designated (S.P.)
7. Unless otherwise specified, paint all external steelwork with one shop coat of Inorganic Zinc Silicate primer after blast cleaning to a class 2.5 finish. Touch up damaged areas with cold galv after power cleaning. members encased in concrete, fire sprayed or HSTF bolted connections must not be painted
8. Unless otherwise specified paint all internal steelwork with one shop coat of Red Oxide Zinc Phoshate primer after blast cleaning to a class 2 finish. Touch up damaged areas as required after power cleaning. Alternatively for RHS, use 'Duragal' and touch up with Dimet Zeden or equal and paint for long term protection to manufacturers recommendations.
9. Unless otherwise specified paint steelwork below finished surface level and not concrete encased with high build epoxy.
10. Unless otherwise specified paint all steelwork one shop coat of Red Oxide Zinc Phosphate primer. Do not paint members encased in concrete, fire sprayed or friction grip bolted connections.
11. Protective coatings to all external steelwork to comply with BCA-96 Table 3.4.4.2.

TIMBER

1. Structural timber shall be minimum stress grade F17 (U.N.O.) to comply with AS1720

INSULATION

1. Aircell 65 or equivalent sarking planket to be installed to manufacturers instructions

CERTIFIED AS STRUCTURALLY ADEQUATE

KFB Engineers Civil & Structural
1/38-42 Pease St, Cairns | PO Box 927, Cairns Q 4870
P: 07 40320492 | F: 07 40320092 | E: email@kfbeng.com.au

Date: 13/6/23 Signed:
Job No: K-10582 NT Reg. 33968ES

amend: a :change dwg. title & layouts, add dwgs: 06/06/23

Wilkins Drafting Service Ph.0457889990	Project Title: PROPOSED UNDERCOVER AREAS TO EXISTING 'H' SHAPE HOUSE JABIRU HOUSING JABIRU. N.T.	Drawing Title: 'H' SHAPE - LAYOUT PLAN STRUCTURAL NOTES	Client: Jabiru Kabolkmaken LTD.	
			Scale: as shown on A3	Date: 08/09/2022
			Job No.: J22418	Dwg. No.: D5a of 8

GENERAL NOTES

1. These drawings contain information required for obtaining abuilding permit., they are not detailed sufficiently for a specification for a building contract with a builder. An additional specification should be written to include painting, electrical & plumbing fittings & secondary fixings (kitchen, robes, cupboards, etc.)
2. All work & materials shall comply with the current Building Code of Australia & comply with the relevant current Standards Association of Australia codes and the local statutory authorities regulations (N.T. deemed to comply standards)
3. All dimensions are in millimetres unless stated otherwise. All levels are expressed in metres. Verify all dimensions relevant to setting out and off-site work before construction and fabrication is commenced as no reponsibilty will be taken after construction commences.
4. Read drawings in conjunction with all other consultants' drawings and specifications and with such other written instructions as may be issued during the course of the contract Refer all discrepancies to the Superintendent for decision before proceeding with the work.
5. During construction maintain the structure in a stable condition and ensure no part is overstressed under construction activities. Seek approval for all substitutions from the Superintendent before the work commences.
6. Keep the site in a clean & tidy condition thaughout construction & at the completion of work remove all litter & debris to the satisfaction of the superintendent.

LEGEND:

- F1 450dia. x 900 deep bored pier footing refer typical detail
- F2 300w x 100d slab edge thickening refer typical detail
- F2a 300w x 100d slab edge thickening with R12 dowels to exg slab edge refer typical detail
- C1 T5 x 4 shs column fixed to footing
- R1 125 x T5 x 4 rhs rafter fully weld to columns
- P1 P1 100 x 50 x 2 rhs purlins @ 900cts max weld to rafters

CERTIFIED AS STRUCTURALLY ADEQUATE

KFB Engineers — Civil & Structural
1/38-42 Pease St, Cairns | PO Box 927, Cairns Q 4870
P: 07 40320492 | F: 07 40320092 | E: email@kfbeng.com.au

Date: 13/6/23 Signed:
Job No: K-10582 NT Reg. 33968ES

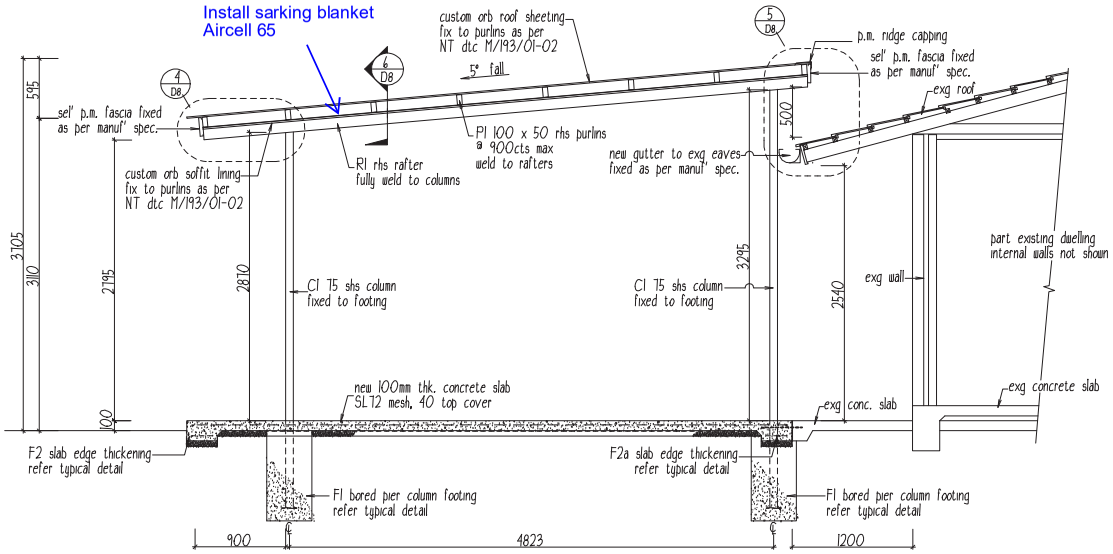

SECTION B
1 : 50

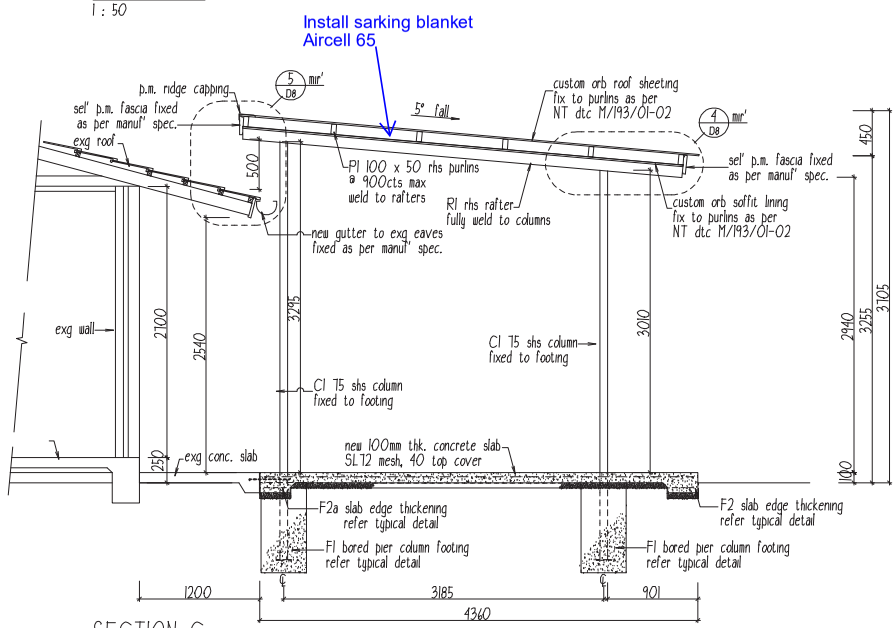

SECTION C
1 : 50

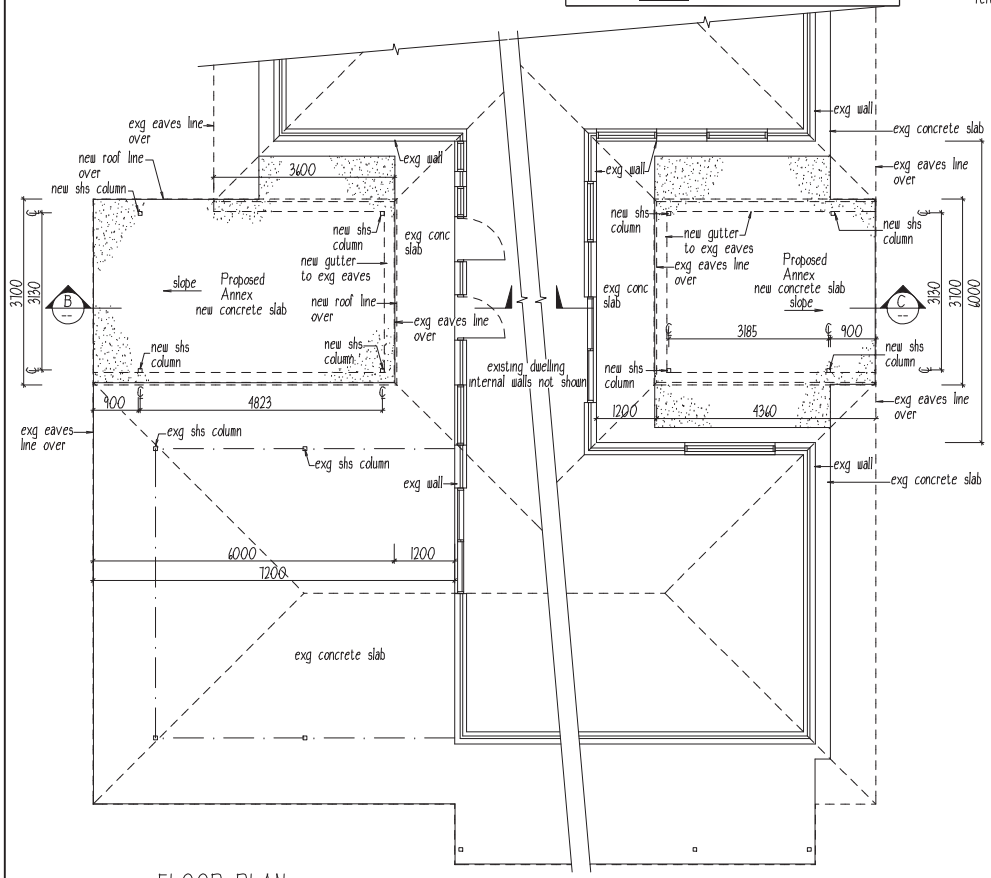

FLOOR PLAN
1 : 100

amend: a :change dwg. title & layouts, add dwgs: 06/06/23

Wilkins Drafting Service Ph.0457889990	Project Title: PROPOSED UNDERCOVER AREAS TO EXISTING 'H' SHAPE HOUSE JABIRU HOUSING JABIRU. N.T.	Drawing Title: FLOOR PLAN SECTION B SECTION C GENERAL NOTES	Client: Jabiru Kabolkmaken LTD.
			Scale: as shown on A3 — Date: 08/09/2022
			Job No.: J22418 — Dwg. No.: D6a of 8

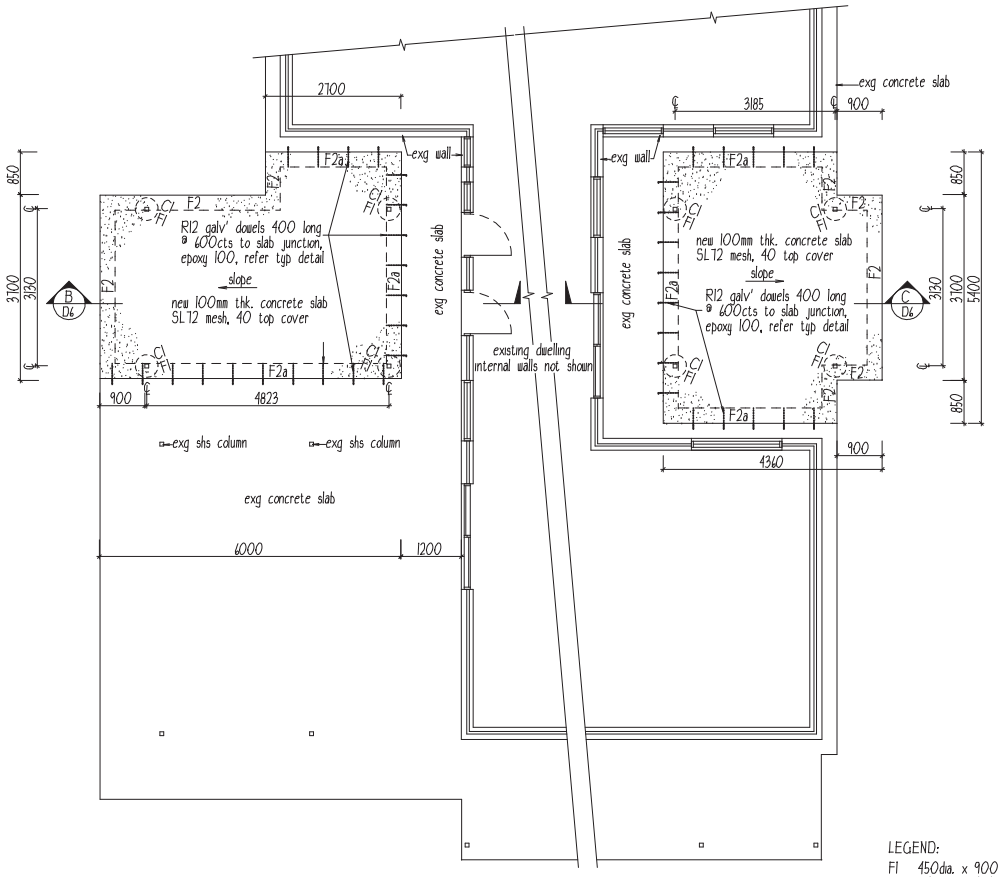

SLAB/FOOTING PLAN
1 : 100

LEGEND:

- F1 450dia. x 900 deep bored pier footing refer typical detail
- F2 300w x 100d slab edge thickening refer typical detail
- F2a 300w x 100d slab edge thickening with R12 dowels to exg slab edge refer typical detail
- C1 75 x 4 shs column fixed to footing
- R1 125 x 75 x 4 rhs rafter fully weld to columns
- P1 100 x 50 x 2 rhs purlins @ 900cts max weld to rafters
- sb 30 x 1mm galv' strap bracing pulled tight & fixed with 3/10-16x16 wafer head teks each end @ 1 tek to each purling crossing.

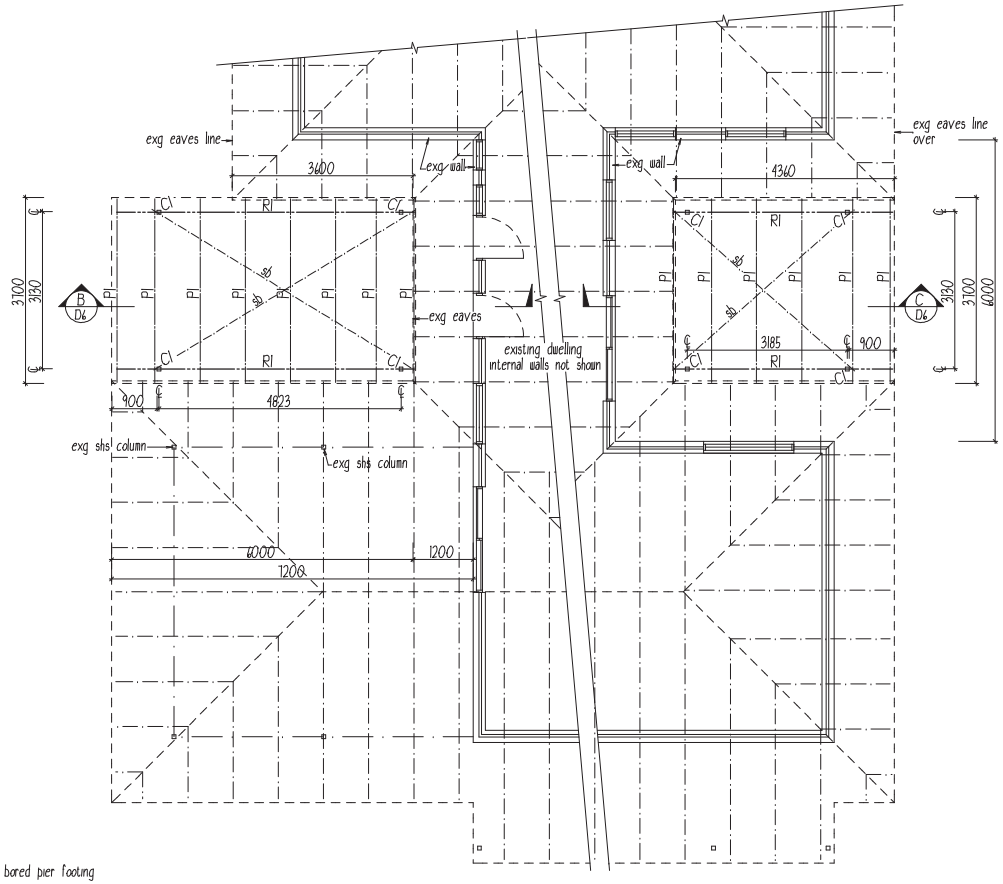

ROOF FRAMING PLAN
1 : 100

CERTIFIED AS STRUCTURALLY ADEQUATE

KFB Engineers — Civil & Structural
1/38-42 Pease St, Cairns | PO Box 927, Cairns Q 4870
P: 07 40320492 | F: 07 40320092 | E: email@kfbeng.com.au

Date: 13/6/23 Signed:
Job No: K-10582 NT Reg. 33968ES

amend: a :change dwg. title & layouts, add dwgs: 06/06/23

Wilkins Drafting Service Ph.0457889990	Project Title: PROPOSED UNDERCOVER AREAS TO EXISTING 'H' SHAPE HOUSE JABIRU HOUSING JABIRU. N.T.	Drawing Title: SLAB/FOOTING PLAN ROOF FRAMING PLAN	Client: Jabiru Kabolkmaken LTD.
			Scale: as shown on A3 / Date: 08/09/2022
			Job No.: J22418 / Dwg. No.: D7a of 8

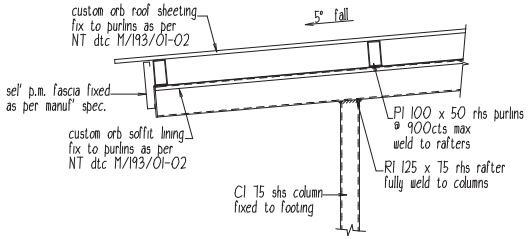

DETAIL 4 / D6
1 : 20

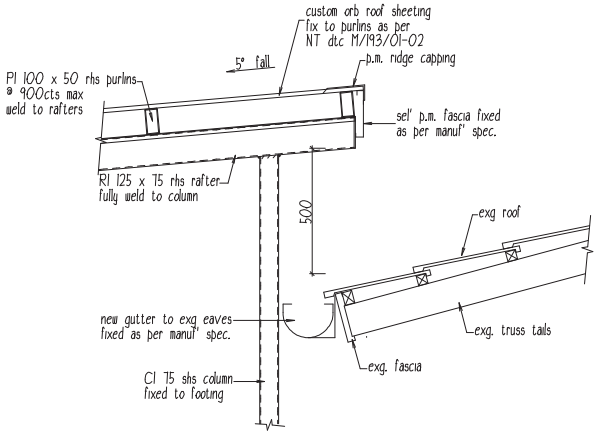

DETAIL 5 / D6
1 : 20

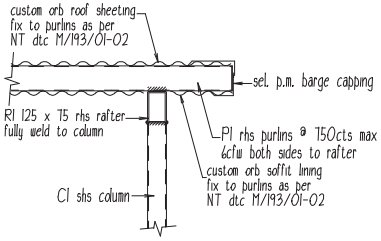

DETAIL 6 / D4
1 : 20

CERTIFIED AS STRUCTURALLY ADEQUATE

KFB Engineers Civil & Structural
1/38-42 Pease St, Cairns | PO Box 927, Cairns Q 4870
P: 07 40320492 | F: 07 40320092 | E: email@kfbeng.com.au

Date: 13/6/23 Signed:
Job No: K-10582 NT Reg. 33968ES

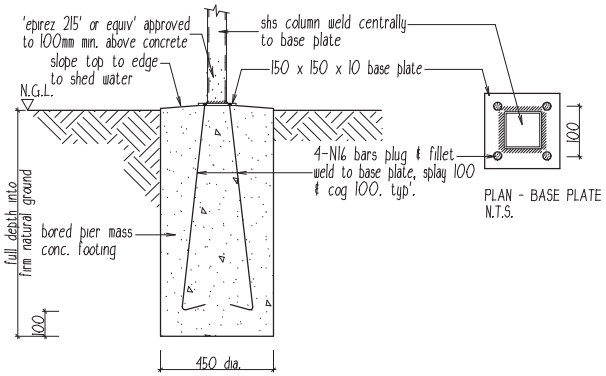

F1 - TYPICAL DETAIL
1 : 20

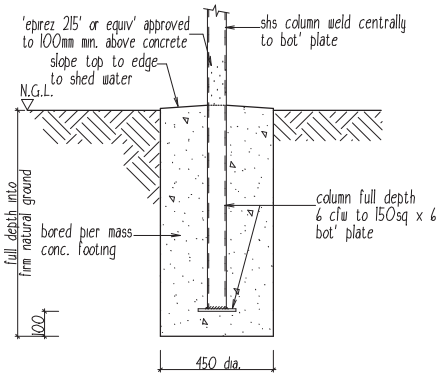

F1 - ALT' DETAIL
1 : 20

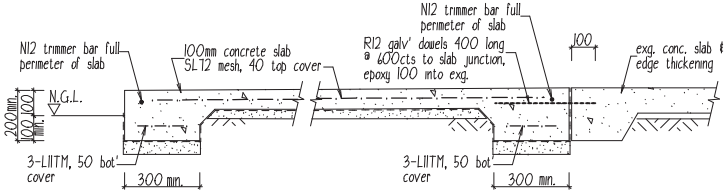

F2 - TYPICAL DETAIL
1 : 20

F2a - TYPICAL DETAIL
1 : 20

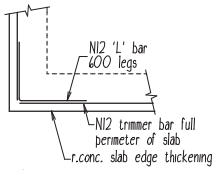

at corners

TYPICAL SLAB REINF' PLAN DETAIL
N.T.S.

LEGEND:

F1	450dia. x 900 deep bored pier footing refer typical detail
F2	300w x 100d slab edge thickening refer typical detail
F2a	300w x 100d slab edge thickening with R12 dowels to exg' slab edge refer typical detail
C1	75 x 4 shs column fixed to footing
R1	R1 rhs rafter fully weld to columns
P1	P1 100 x 50 rhs purlins @ 900cts max weld to rafters

amend: a :change dwg. title & layouts, add dwgs: 06/06/23

Wilkins Drafting Service Ph.0457889990	Project Title: PROPOSED UNDERCOVER AREAS TO EXISTING 'H' SHAPE HOUSE JABIRU HOUSING JABIRU. N.T.	Drawing Title: TYPICAL FOOTING DETAILS DETAILS 4, 5 & 6.	Client: Jabiru Kabolkmaken LTD.
			Scale: as shown on A3 / Date: 08/09/2022
			Job No.: J22418 / Dwg. No.: D8a of 8

GENERAL NOTES

1. These drawings contain information required for obtaining abuilding permit, they are not detailed sufficiently for a specification for a building contract with a builder. An additional specification should be written to include painting, electrical & plumbing fittings & secondary fixings (kitchen, robes, cupboards, etc.)
2. All work & materials shall comply with the current Building Code of Australia & comply with the relevant current Standards Association of Australia codes and the local statutory authorities regulations (N.T. deemed to comply standards)
3. All dimensions are in millimetres unless stated otherwise. All levels are expressed in metres. Verify all dimensions relevant to setting out and off-site work before construction and fabrication is commenced as no reponsibility will be taken after construction commences.
4. Read drawings in conjunction with all other consultants' drawings and specifications and with such other written instructions as may be issued during the course of the contract Refer all discrepancies to the Superintendent for decision before proceeding with the work.
5. During construction maintain the structure in a stable condition and ensure no part is overstressed under construction activities. Seek approval for all substitutions from the Superintendent before the work commences.
6. Keep the site in a clean & tidy condition thaughout construction & at the completion of work remove all litter & debris to the satisfaction of the superintendent.

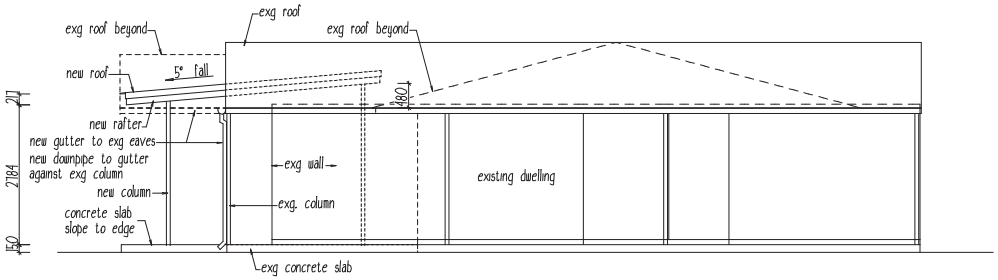

ELEVATION 1
1 : 100

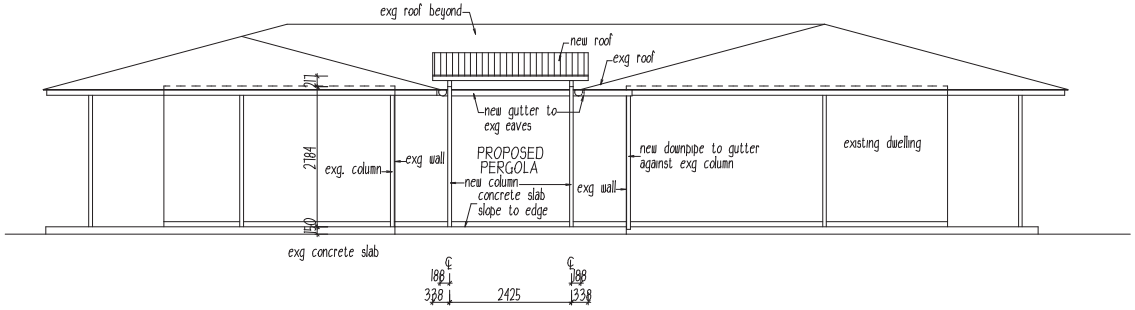

ELEVATION 2
1 : 100

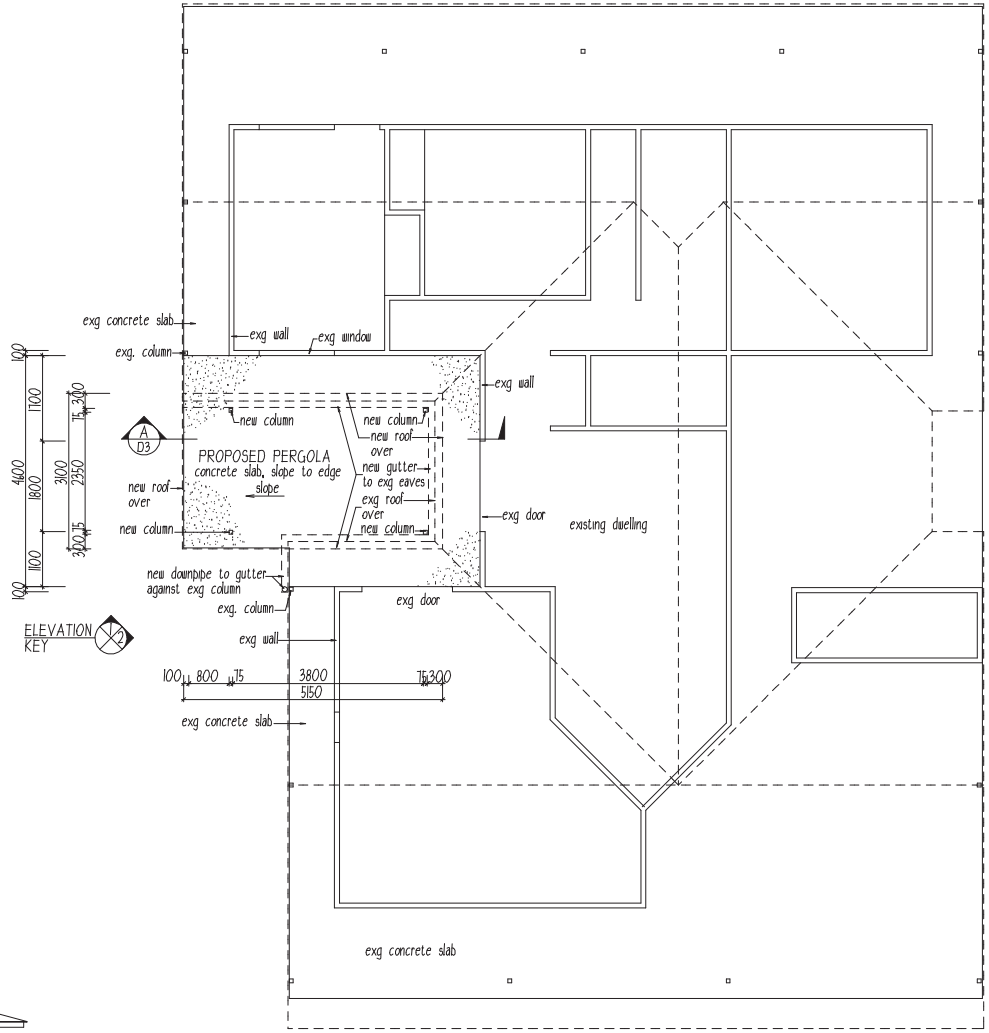

LAYOUT PLAN
1 : 100

CERTIFIED AS STRUCTURALLY ADEQUATE

KFB Engineers Civil & Structural
1/38-42 Pease St, Cairns | PO Box 927, Cairns Q 4870
P: 07 40320492 | F: 07 40320092 | E: email@kfbeng.com.au

Date: 13/6/23 Signed:
Job No: K-10582 NT Reg. 33968ES

amend': 2 : rev' project title: 06/06/23

Wilkins Drafting Service Ph.0457889990	Project Title: PROPOSED PERGOLA TO EXISTING JABIRU HOUSING MISC 3 BEDROOM DWELLING JABIRU. N.T. 0886	Drawing Title: LAYOUT PLAN ELEVATIONS GENERAL NOTES	Client: Jabiru Kabolkmakmen
			Scale: as shown on A3 / Date: 24/10/2022
			Job No.: J22425 / Dwg. No.: D1a of 4

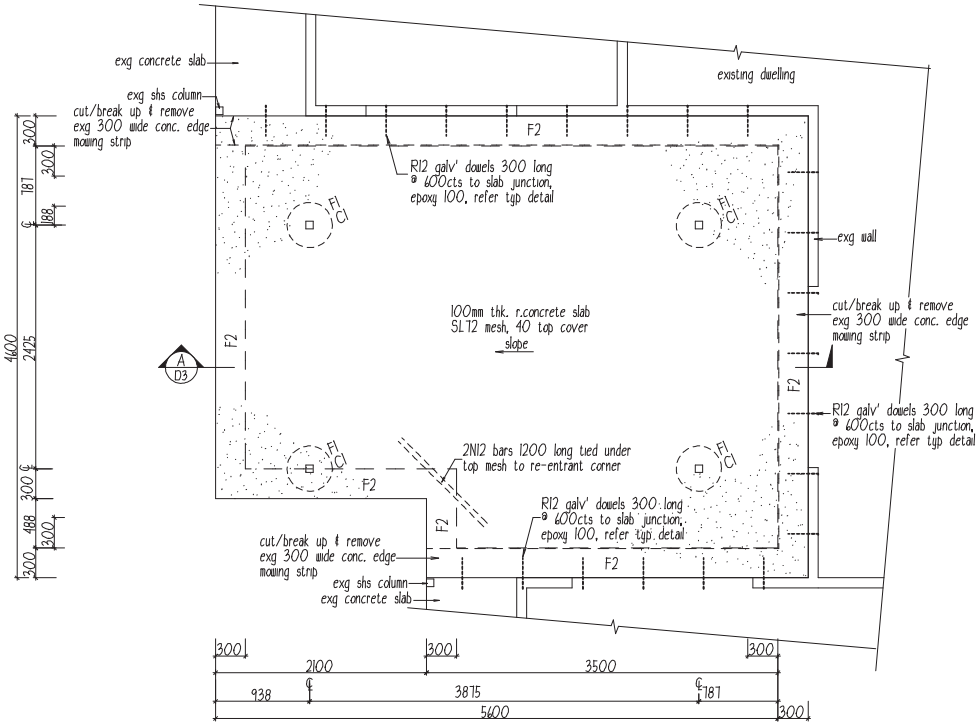

SLAB/FOOTING PLAN
1 : 50

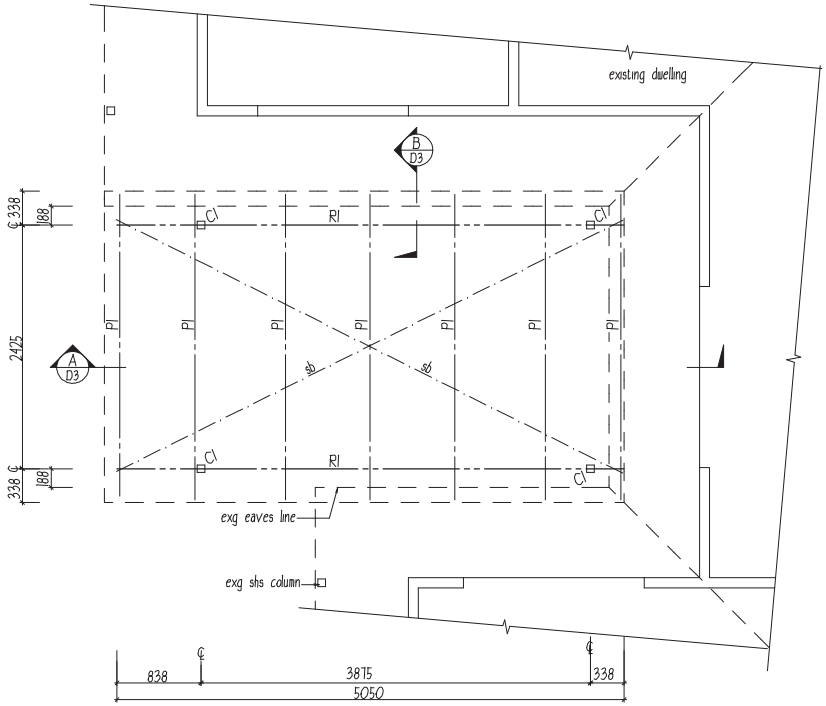

ROOF FRAMING PLAN
1 : 50

LEGEND:

- F1 450dia. x 900 deep bored pier footing refer typical detail
- F2 300w x 100d slab edge thickening refer typical detail
- F2a 300w x 100d slab edge thickening with R12 dowels to exg slab edge refer typical detail
- C1 75 x 4 shs column fixed to footing
- R1 125 x 75 x 4 rhs rafter fully weld to columns
- P1 100 x 50 x 2 rhs purlins @ 900cts max weld to rafters
- sb 30 x 1mm galv' strap bracing pulled tight & fixed with 3/10-16x16 wafer head teks each end @ 1 tek to each purling crossing.

CERTIFIED AS STRUCTURALLY ADEQUATE

KFB Engineers — Civil & Structural
1/38-42 Pease St, Cairns | PO Box 927, Cairns Q 4870
P: 07 40320492 | F: 07 40320092 | E: email@kfbeng.com.au

Date: 13/6/23 Signed:
Job No: K-10582 NT Reg. 33968ES

amend': 2 : rev' project title: 06/06/23

Wilkins Drafting Service Ph.0457889990	Project Title: PROPOSED PERGOLA TO EXISTING JABIRU HOUSING MISC 3 BEDROOM DWELLING JABIRU. N.T. 0886	Drawing Title: SLAB/FOOTING PLAN ROOF FRAMING PLAN	Client: Jabiru Kabolkmakmen
			Scale: as shown on A3 / Date: 24/10/2022
			Job No.: J22425 / Dwg. No.: D2a of 4

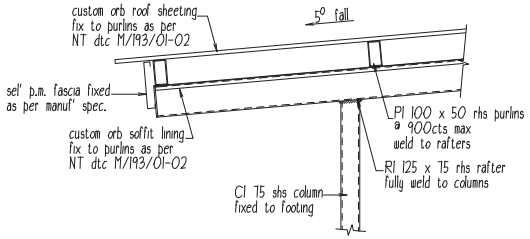

DETAIL 3
1 : 20

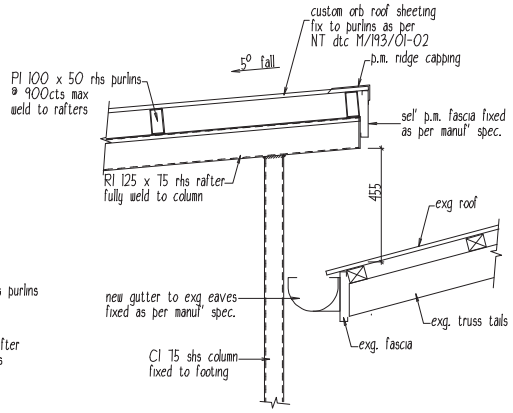

DETAIL 4
1 : 20

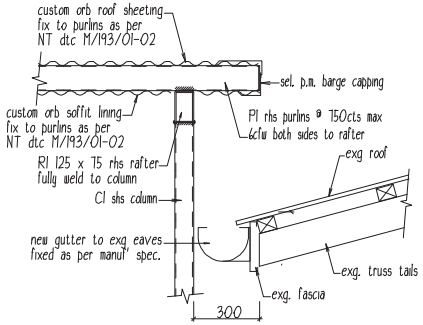

DETAIL 5
1 : 20

LEGEND:

F1 450dia. x 900 deep bored pier footing
refer typical detail

F2 300w x 100d slab edge thickening
refer typical detail

F2a 300w x 100d slab edge thickening
with R12 dowels to exg slab edge
refer typical detail

C1 75 x 4 shs column
fixed to footing

R1 125 x 75 x 4 rhs rafter
fully weld to columns

P1 100 x 50 x 2 rhs purlins
@ 900cts max weld to rafters

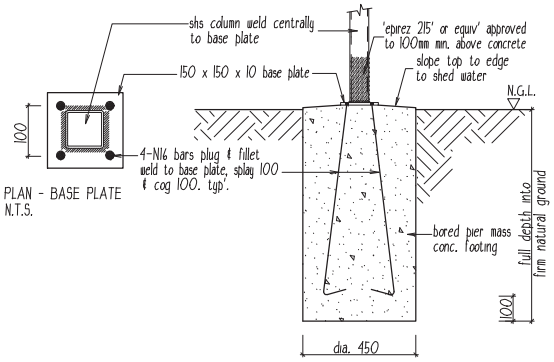

F1 - TYPICAL DETAIL
1 : 20

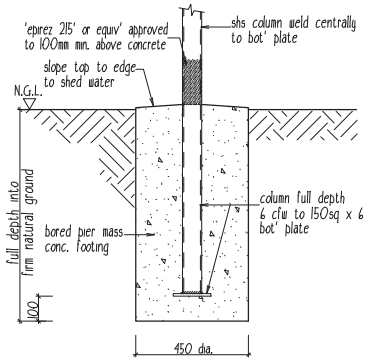

F1 - ALT' DETAIL
1 : 20

Install sarking blanket
Aircell 65

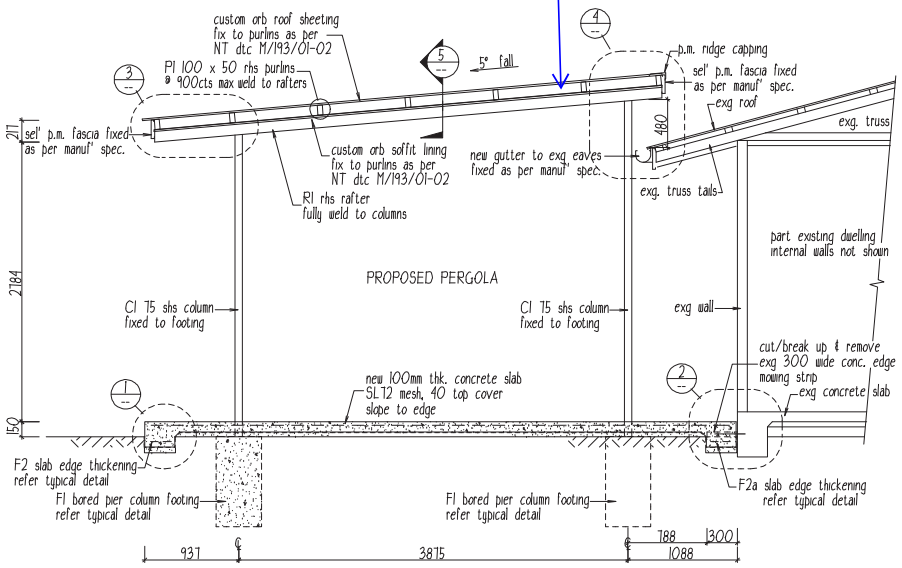

SECTION A
1 : 50

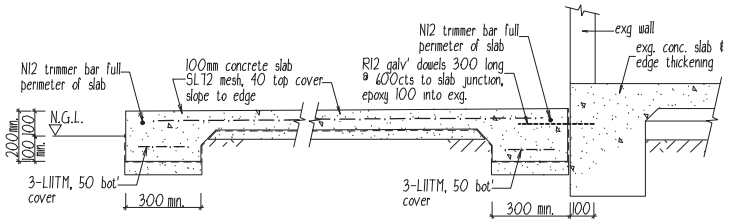

DETAIL 1
F2 - TYPICAL DETAIL
1 : 20

DETAIL 2
F2a - TYPICAL DETAIL
1 : 20

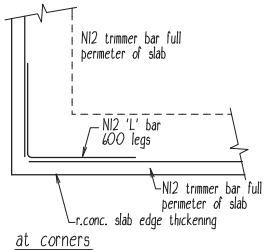

at corners

TYPICAL SLAB REINF' PLAN DETAIL
N.T.S.

CERTIFIED AS STRUCTURALLY ADEQUATE

KFB Engineers — Civil & Structural
1/38-42 Pease St, Cairns | PO Box 927, Cairns Q 4870
P: 07 40320492 | F: 07 40320092 | E: email@kfbeng.com.au

Date: 13/6/23 Signed:
Job No: K-10582 NT Reg. 33968ES

amend': A : rev' project title: 06/06/23

Wilkins Drafting Service Ph.0457889990	Project Title: PROPOSED PERGOLA TO EXISTING JABIRU HOUSING MISC 3 BEDROOM DWELLING JABIRU. N.T. 0886	Drawing Title: SECTION A DETAILS	Client: Jabiru Kabolkmakmen
			Scale: as shown on A3 / Date: 24/10/2022
			Job No.: J22425 / Dwg. No.: D3a of 4

STRUCTURAL NOTES

DESIGN CRITERIA

1. Dead & live loads - in accordance with AS1170.1 - 2011
2. The Design Wind Criteria is as follows :

Region	C	
Design Wind Speed	V500	Vr = 69m/s
Terrain Category	2.5	
Internal Pressure Coefficient	+0.1 / -0.45	

External Pressure Coefficient in accordance with AS1170 - 2011

3. Foundation design bearing capacity = 100kPa (allowable).

Wind Classification C2 (AS4055)

Ultimate and Serviceability Limit State Design Wind Pressures

Wind Classification	Design gust wind speed (m/s)		Design pressures for windows (kPa)			
	Vh,u	Vh,s	Greater than 1.2m from corners		Up to 1.2m from corners	
	ULS	SLS	ULS	SLS	ULS	SLS
C1	50	32	±1.80	±0.55	-2.70	-0.83
C2	61	39	±2.68	±0.88	-4.02	-1.23
C3	74	47	±3.94	±1.19	-5.91	-1.79

EARTHWORKS

1. Earthworks construction shall comply with AS3798 & AS2870.
2. Excavation & service trenches shall comply with the following guidelines unless otherwise approved by the engineer

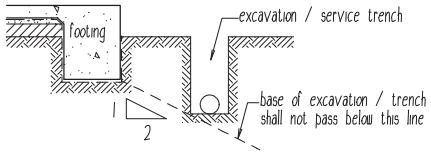

3. The contractor shall determine the exact location of existing services prior to any installation or commencement of work.

TERMITE MANAGEMENT SYSTEM

1. Termite Management System to be installed & certified by an approved applicator in accordance with AS 3660.1.
2. Provide Min. 300 wide x 50mm concrete mowing strip over perimeter reticulation system as to AS3660.1
3. A durable certificate is to be fixed in the meter box on completion.

FOOTINGS

1. Found all footings in original undisturbed ground having a safe bearing capacity of 150 kPa as noted on drawings. Before any concrete is placed, ensure the safe bearing capacity is verified.
2. Backfill sewers, stormwater drains and other in-ground services adjacent to buildings, if laid before footings are constructed, with approved fill placed in 200mm Max. layers and compacted to 95% MMDD.
   If laid after footings are constructed, avoid undermining of footings by either fully shoring trenches, or keeping excavation outside an influence line extended downwards at a slope of 1 in 2 from the the bottom corner of all footings. Backfill trenches as noted above.
3. Use selected fill (gravel, decomposed or broken rock) free from clay clumps and organic matter, conforming with the following grading requirements :

AS METRIC SIEVE	% PASSING BY WEIGHT	AS METRIC SIEVE	% PASSING BY WEIGHT
75.0 mm	100	2.36 mm	20 - 50
9.5 mm	30 - 100	0.075 mm	5 - 25

   Strip the area of the works of all top soil and deleterious material prior to placement of fill or compaction. Compact fill up to 150 mm below slab level in 150 mm layers to 95% MMDD.
4. Compact fill in the 150 mm layer immediately below slab level to 95% MMDD. Compact sand blinding layer below concrete slab by vibration plate or flooding to 95% MMDD.
5. Backfill over excavation with lean mix concrete.
6. Builder to confirm site classification "S" to AS2870

CONCRETE

1. All slabs & footings shall be constructed to comply with the requirements of AS2870 - 2011
2. Concrete slump shall be 80 +_15mm. No admixtures to be used without approval from the engineer.
3. Concrete cover to be maintained by the use of approved chairs at nominal 800cts. Conduits & pipes shall not be placed within concrete cover.
4. Mesh reinforcement laps shall be at least one full wire spacing plus 25mm. Reinforcement shall be in accordance with AS4671.
5. Continuously cure slabs for a minimum of 7 days after casting by ponding, covering with a waterproof membrane or other approved means.

INSULATION

1.Aircell 65 or equivalent sarking planket to be installed to manufacturers instructions

STEEL

1. All structural steelwork shall comply with AS 4100 - SAA Steel Struct. Code & associated Australian Standards.
2. Ensure welding is performed by an experienced operator in accordance with AS 1554.
3. Use hot dipped galvanised commerial bolts (Grade 4.6/S) to AS1111 and AS 1112, tightened to a snug tight fit unless otherwise shown. Where bolts are designated grade 8.8/S, use high strength bolts to AS 1252, tightened to a snug tigh fit.
   Where bolts are designated 8.8/TF or grade 8.8/TB use high strength steel bolts (grade 8.8/S) to AS 1252, fully tensioned in accordance with AS 1511.
4. During construction provide and leave in place, untill permanent bracing elements are constructed, such temporary bracing as is necessary to stabilise the structure during erection.
5. Seal the ends of all tubular members with nominal thickness plates and continuous fillet welds unless otherwise shown.
6. Except where otherwise shown fully weld connections with 6mm continuous fillet general purpose (G.P.) welds for the full contact area. Special purpoes welds are designated (S.P.)
7. Unless otherwise specified, paint all external steelwork with one shop coat of Inorganic Zinc Silicate primer after blast cleaning to a class 2.5 finish. Touch up damaged areas with cold galv after power cleaning. members encased in concrete, fire sprayed or HSTF bolted connections must not be painted
8. Unless otherwise specified paint all internal steelwork with one shop coat of Red Oxide Zinc Phoshate primer after blast cleaning to a class 2 finish. Touch up damaged areas as required after power cleaning. Alternatively for RHS, use 'Duragal' and touch up with Dimet Zeden or equal and paint for long term protection to manufacturers recommendations.
9. Unless otherwise specified paint steelwork below finished surface level and not concrete encased with high build epoxy.
10. Unless otherwise specified paint all steelwork one shop coat of Red Oxide Zinc Phosphate primer. Do not paint members encased in concrete, fire sprayed or friction grip bolted connections.
11. Protective coatings to all external steelwork to comply with BCA-96 Table 3.4.4.2.

TIMBER

1. Structural timber shall be minimum stress grade F17 (U.N.O.) to comply with AS1720

CERTIFIED AS STRUCTURALLY ADEQUATE

KFB Engineers — Civil & Structural
1/38-42 Pease St, Cairns | PO Box 927, Cairns Q 4870
P: 07 40320492 | F: 07 40320092 | E: email@kfbeng.com.au

Date: 13/6/23 Signed:
Job No: K-10582 NT Reg. 33968ES

amend': 2 : rev' project title: 06/06/23

Wilkins Drafting Service Ph.0457889990	Project Title: PROPOSED PERGOLA TO EXISTING JABIRU HOUSING MISC 3 BEDROOM DWELLING JABIRU. N.T. 0886	Drawing Title: STRUCTURAL NOTES	Client: Jabiru Kabolkmakmen
			Scale: as shown on A3 / Date: 24/10/2022
			Job No.: J22425 / Dwg. No.: D4a of 4